ROYAL HYBRID



P-51B MUSTANG

INSTRUCTION SHEET

1/32

932011-NAV 1

ATTENTION ✶ UPOZORNĚNÍ ✶ ACHTUNG ✶ ATTENTION ✶ 注意

Carefully read instruction sheet before assembling. When you use glue or paint, do not use near open flame and use in well ventilated room. Keep out of reach of small children. Children must not be allowed to suck any part, or pull vinyl bag over the head.

Před započetím stavby si pečlivě prostudujte stavební návod. Při používání barev a lepidel pracujte v dobre větrané místnosti. Lepidla ani barvy nepoužívejte v blízkosti otevřeného ohně. Model není určen malým dětem, mohlo by dojít k požití drobných dílů.

INSTRUCTION SIGNS ✶ INSTR. SYMBOLY ✶ INSTRUKTION SINNBILDEN ✶ SYMBOLES ✶ 記号の説明

OPTIONAL VOLBA

BEND OHNOUT

SAND BROUSIT

OPEN HOLE VYVRTAT OTVOR

SYMETRICAL ASSEMBLY SYMETRICKÁ MONTÁŽ

REMOVE ODŘÍZNOUT

REVERSE SIDE OTOČIT

APPLY EDUARD MASK AND PAINT POUŽÍT EDUARD MASK NABARVIT

PLEASE CHECK THE LATEST VERSION OF THE INSTRUCTIONS ON www.eduard.com

PARTS ✶ DÍLY ✶ TEILE ✶ PIÈCES ✶ 部品

A>

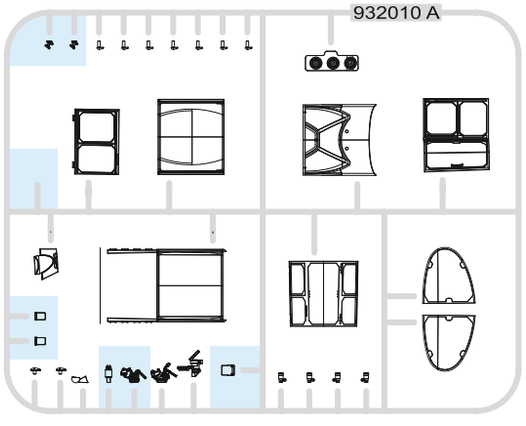

B>

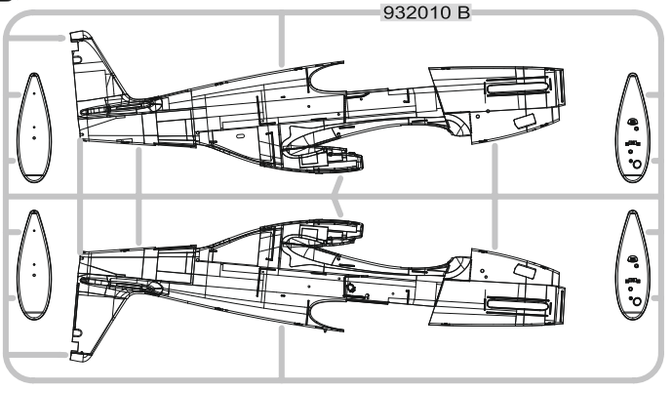

D>

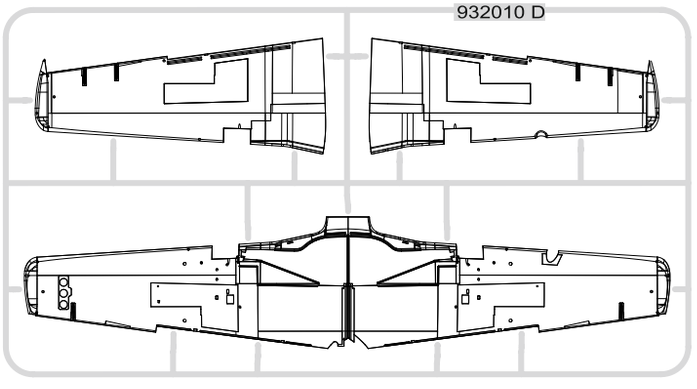

E>

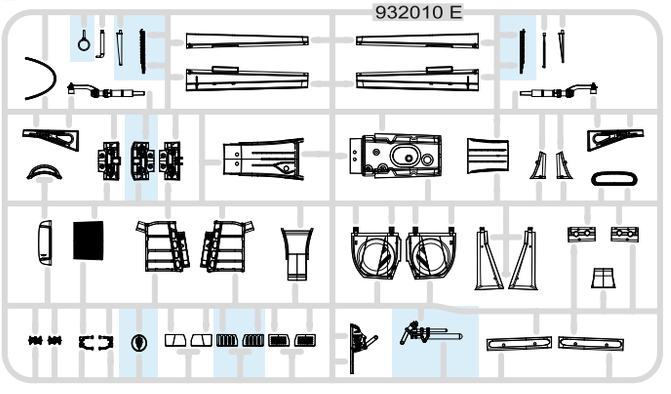

F>

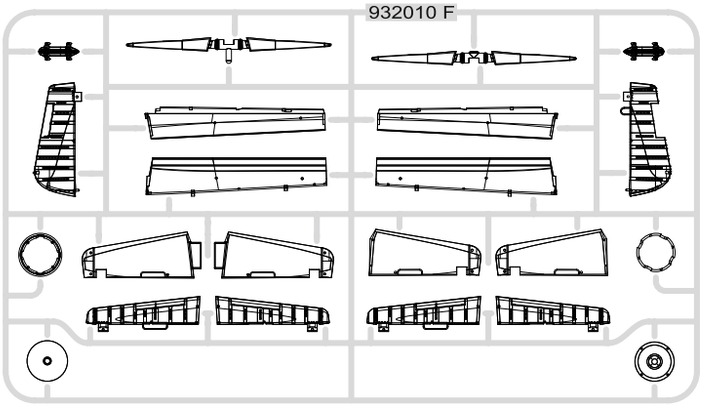

eduard MASK

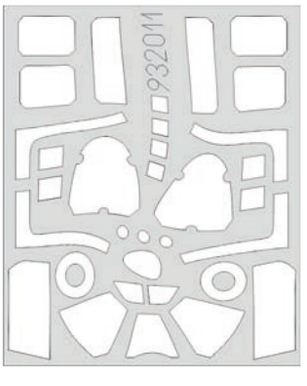

PE - PHOTO ETCHED DETAIL PARTS

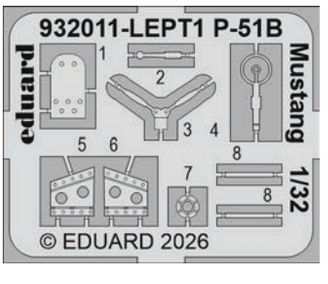

RP - RESIN PARTS

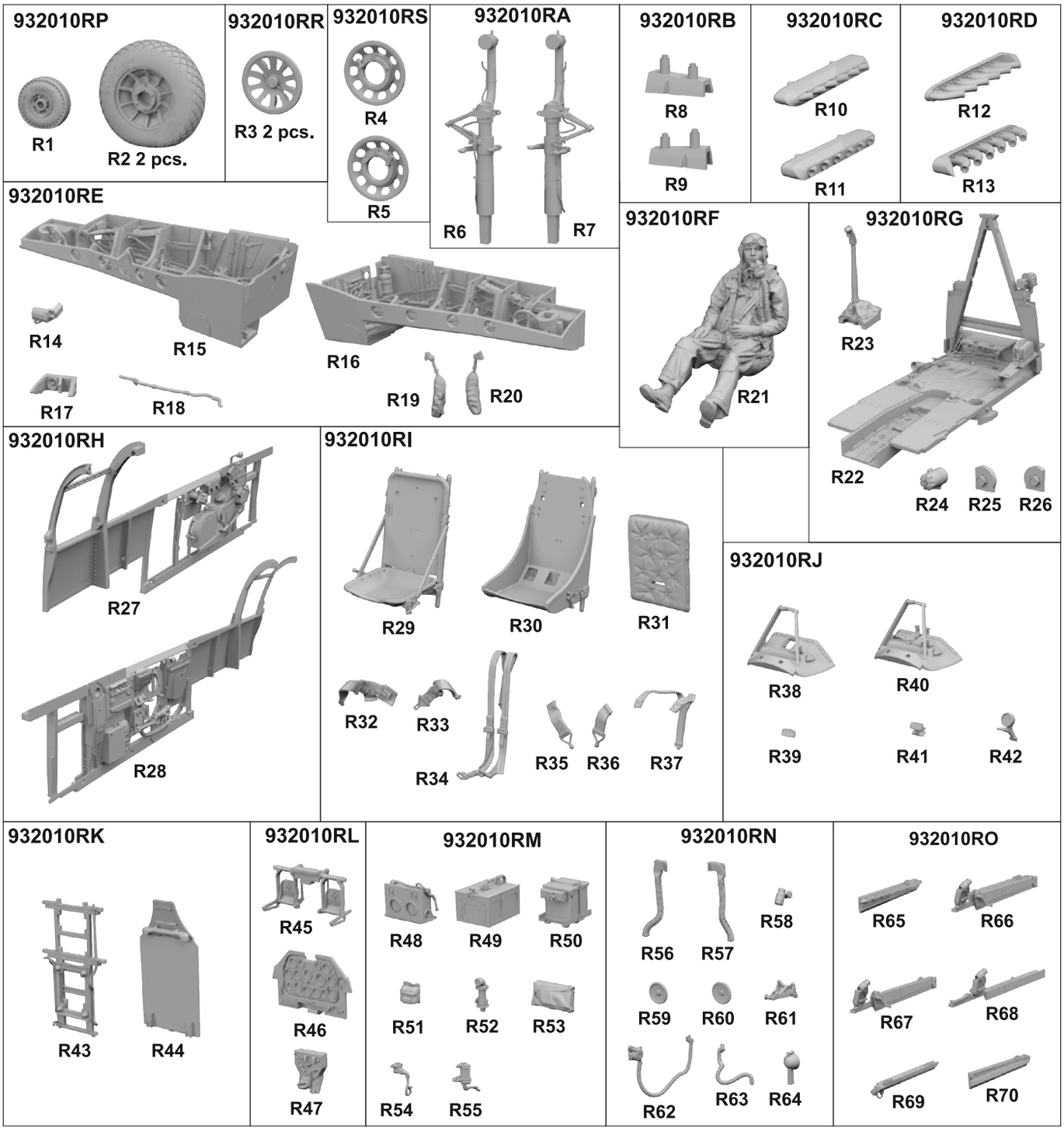

-Parts not for use. -Teile werden nicht verwendet. -Pièces à ne pas utiliser. -Tyto díly nepoužívejte při stavbě. - 使用しない部品

COLOURS ✶ BARVY ✶ FARBEN ✶ PEINTURE ✶ 色

GSi Creos (GUNZE)		
AQUEOUS	Mr.COLOR	
H1	C1	WHITE
H8	C8	SILVER
H11	C62	FLAT WHITE
H15	C65	BRIGHT BLUE
H12	C33	FLAT BLACK
H27	C44	TAN
H47	C41	RED BROWN
H52	C12	OLIVE DRAB
H53	C13	NEUTRAL GRAY
H58	C351	INTERIOR GREEN
H74	C368	SKY
H76	C61	BURNT IRON

GSi Creos (GUNZE)		
AQUEOUS	Mr.COLOR	
H77	C137	TIRE BLACK
H90	C47	CLEAR RED
H92	C49	CLEAR ORANGE
H94	C138	CLEAR GREEN
H327	C327	RED
H329	C329	YELLOW
H330	C361	DARK GREEN
	C352	CHROMATE YELLOW
Mr.COLOR SUPER METALLIC		
SM201		SUPER FINE SILVER
SM203		SUPER IRON

MARKINGS A,B,C,D,E,G,H ONLY

Warren McArthur SK-2016 seat

MARKING F ONLY

Schick-Johnson S-9153074 seat

1 = 90% H58 C351 INTERIOR GREEN + 10% H12 C33 FLAT BLACK

RM51 - MARKINGS A,B,C,D,F,G,H ONLY

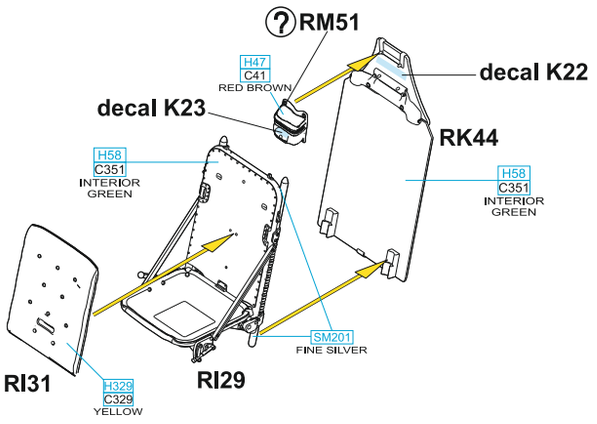

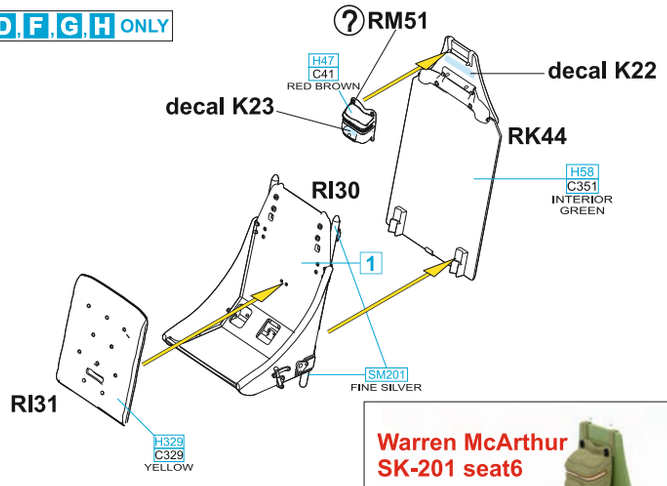

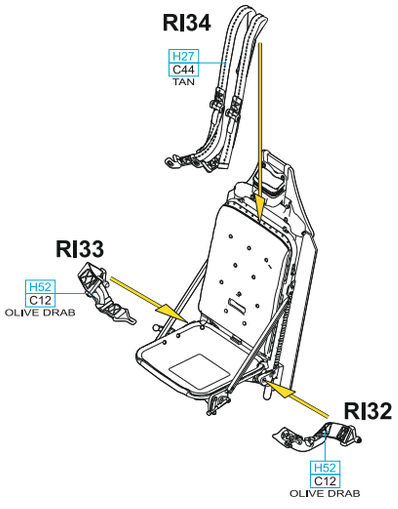

NOTE: Paint the figure of the pilot according to the images you'll find on the pages 107-110 in the book which is part of this kit.



Warren McArthur SK-201 seat6



Schick-Johnson S-9153074 seat



MARKINGS E,F,G,H ONLY

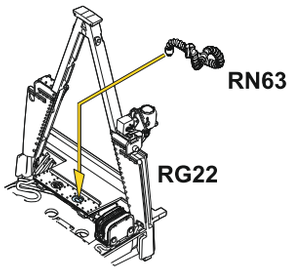

MARKINGS A,B,C,D ONLY

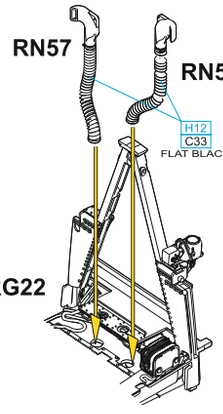

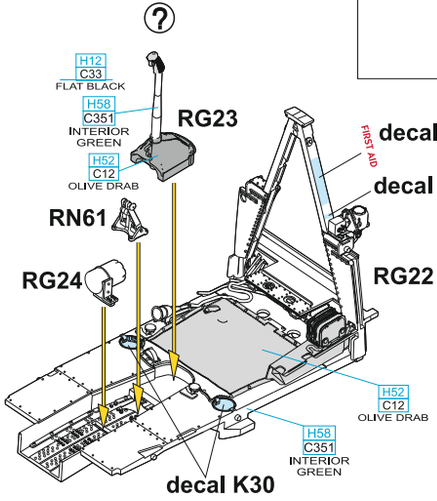

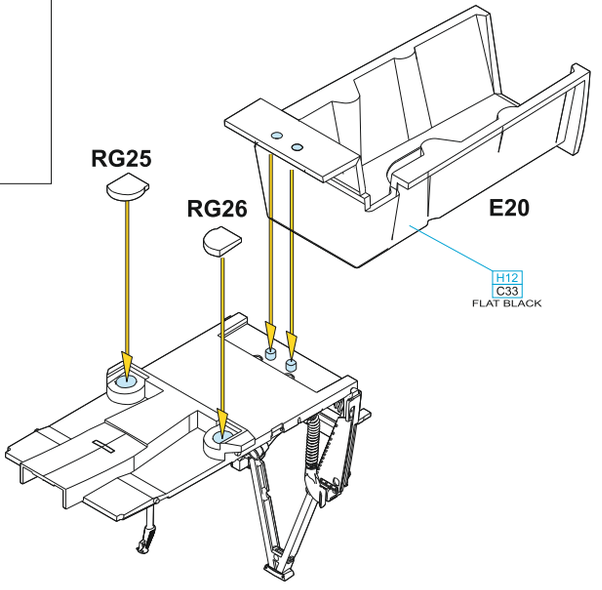

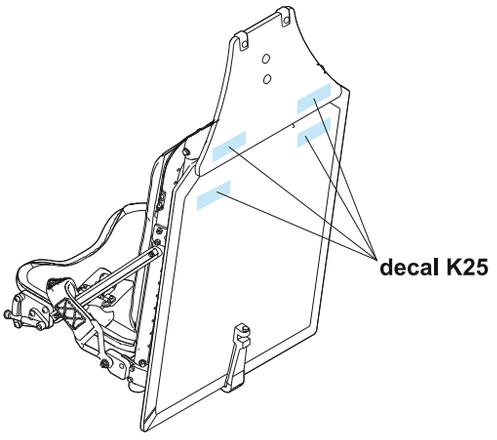

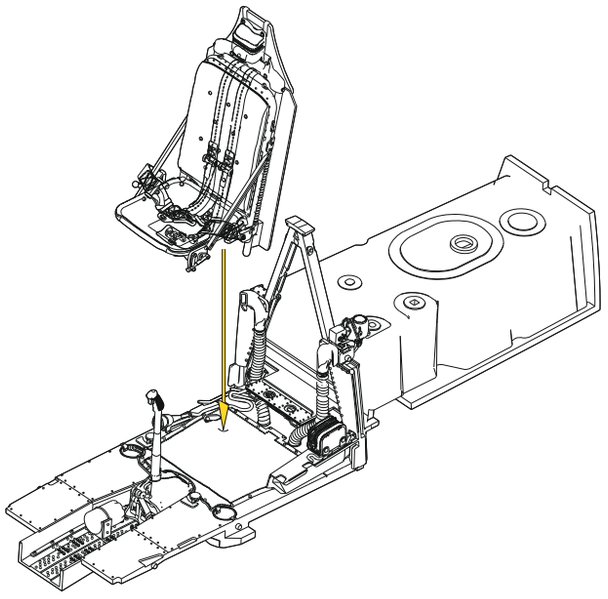

A

RO69 - MARKINGS A, B, C, D ONLY

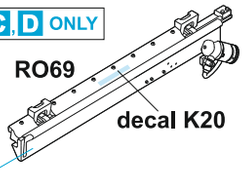

RO65 ? RO70 - MARKINGS E, F, G, H ONLY

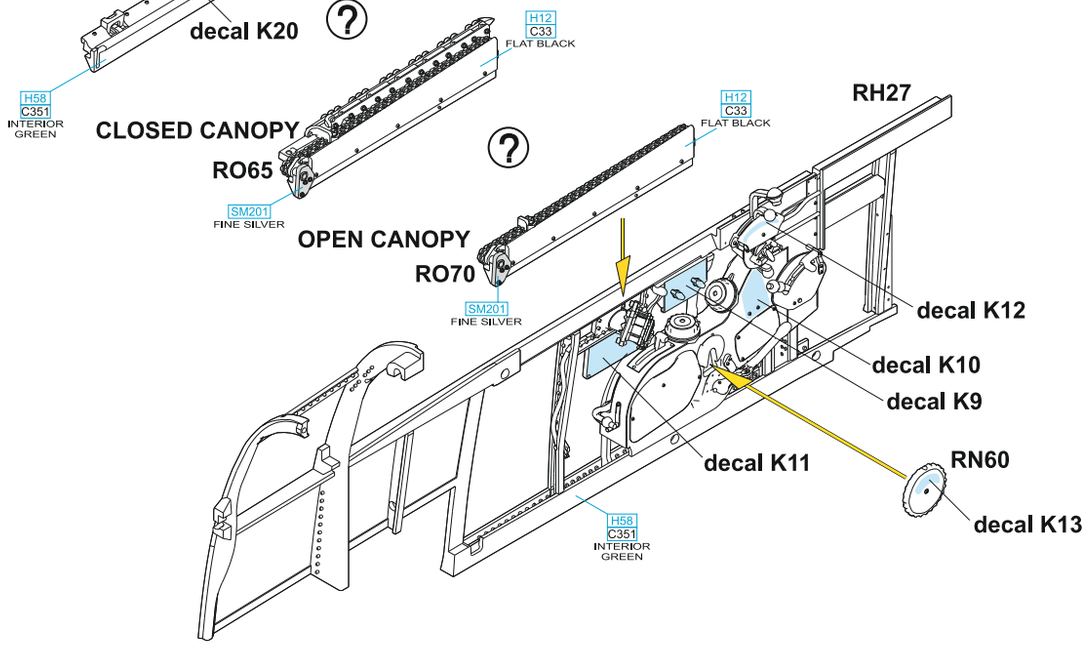

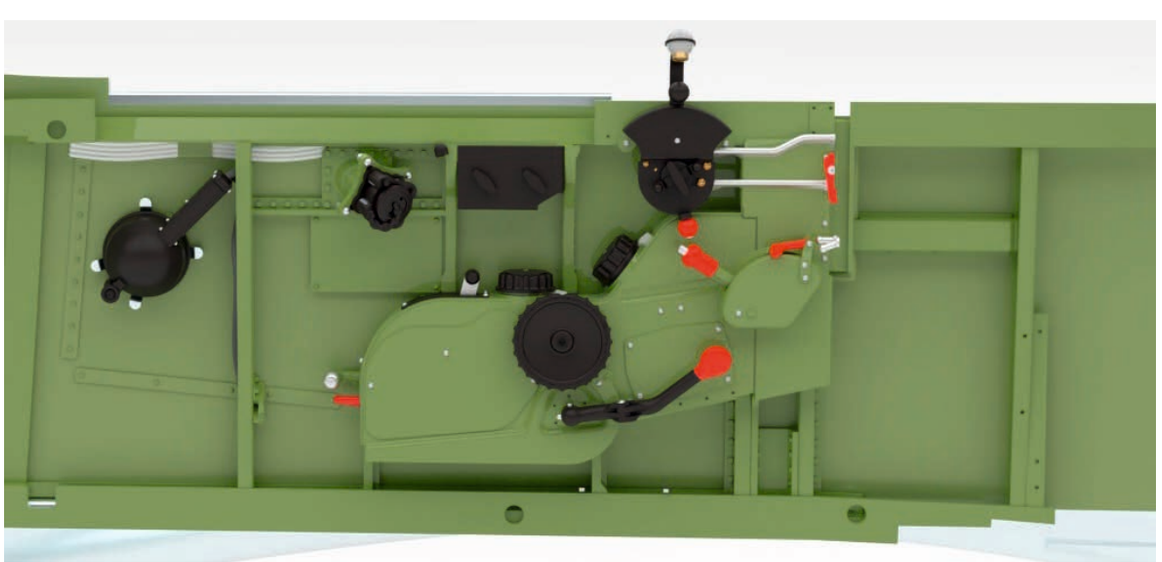

B

RO68 - MARKINGS A, B, C, D ONLY

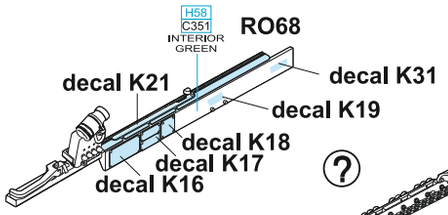

RO66 ? RO67 - MARKINGS E, F, G, H ONLY

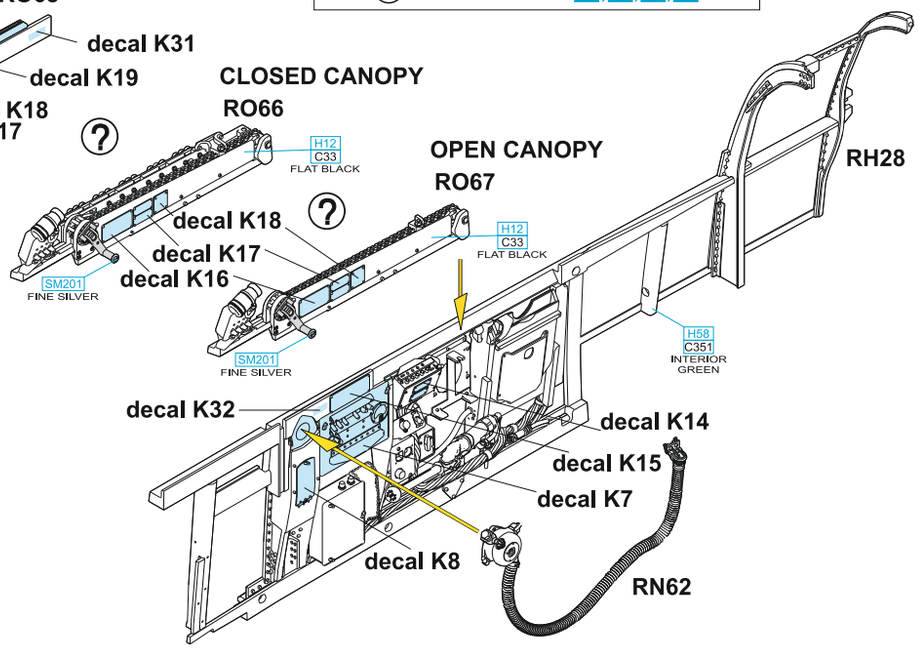



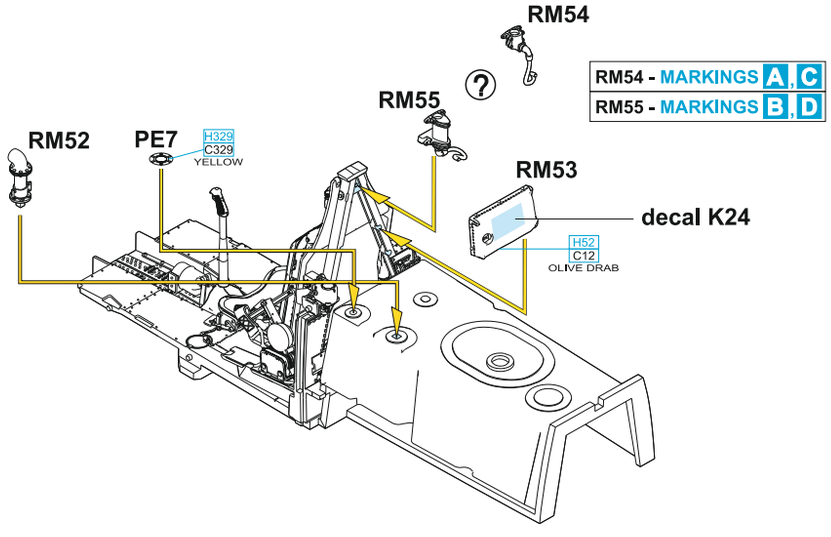

RM54 - MARKINGS A, C

RM55 - MARKINGS B, D

C

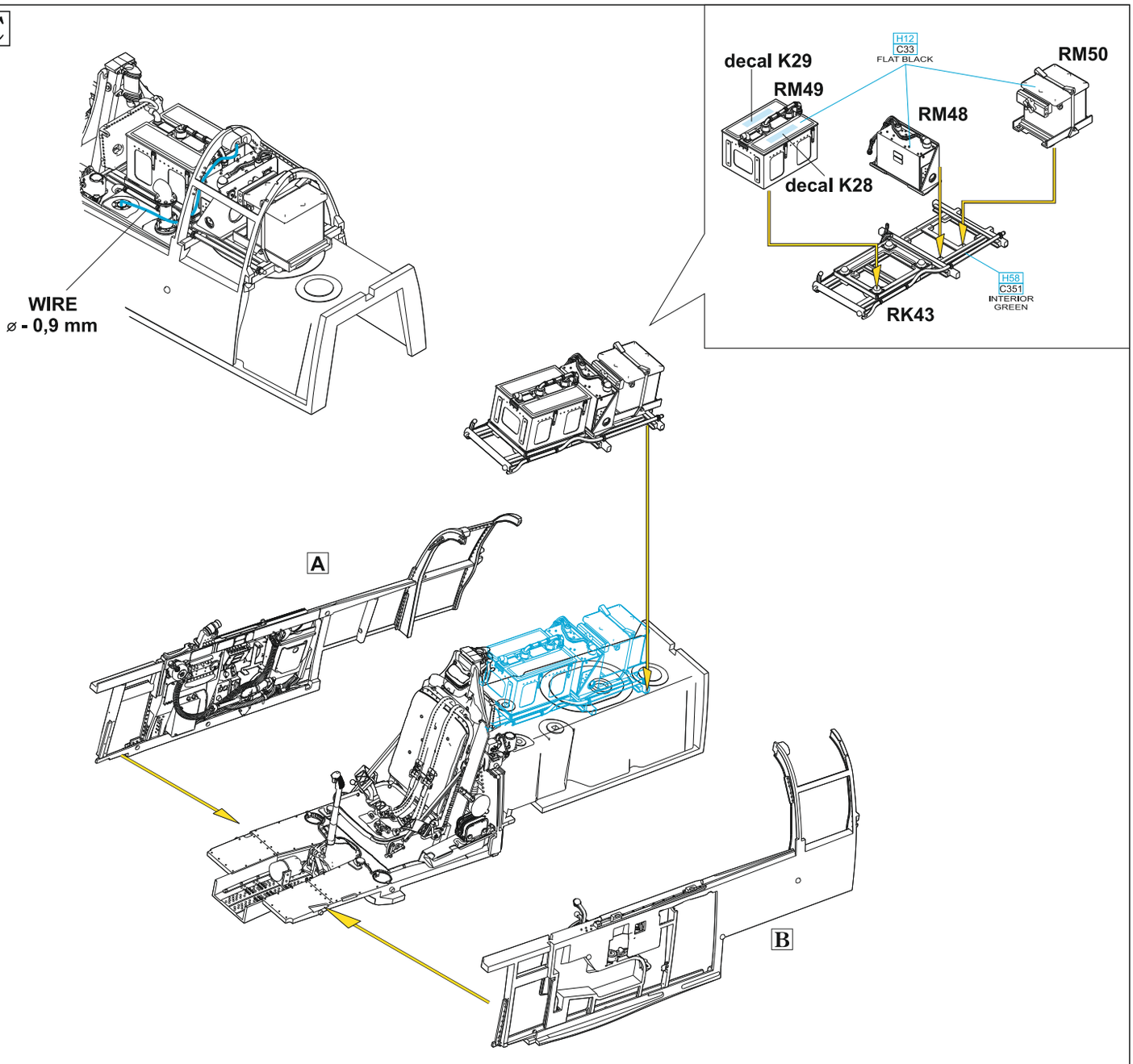
WIRE
⌀ - 0,9 mm
decal K29
RM49
decal K28
H12
C33
FLAT BLACK
RM48
RM50
H58
C351
INTERIOR
GREEN
RK43
A
B

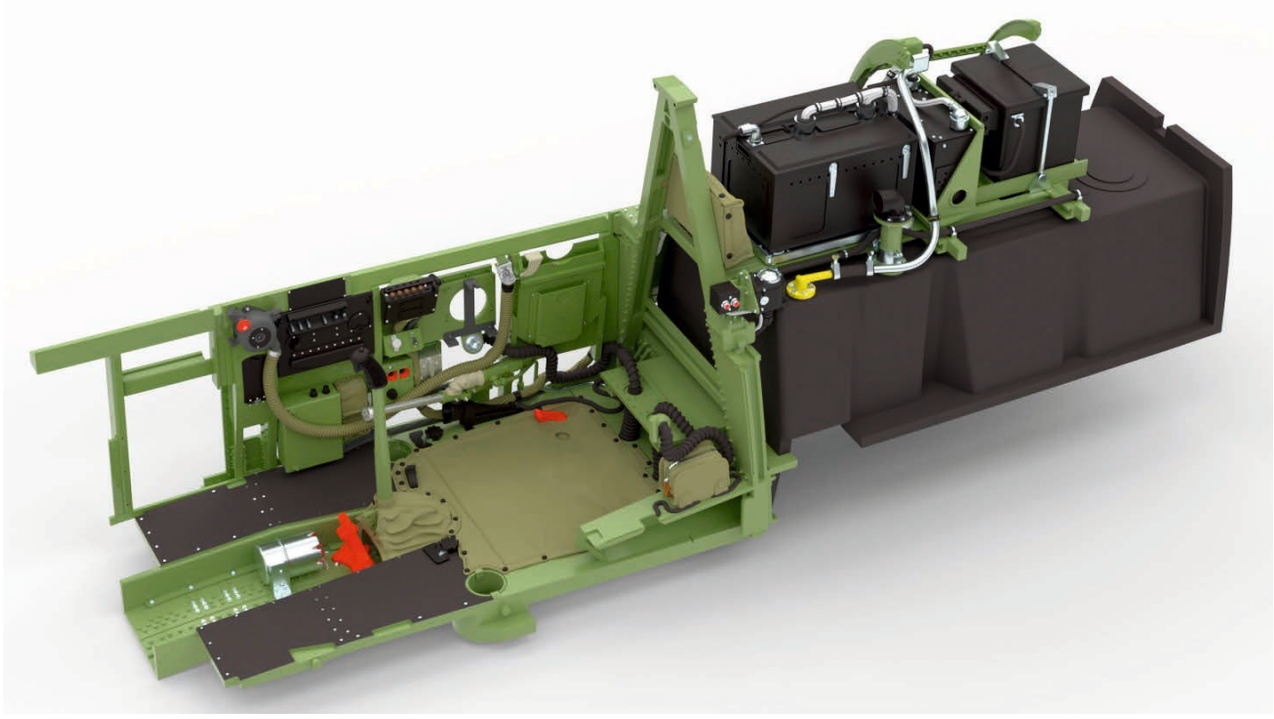

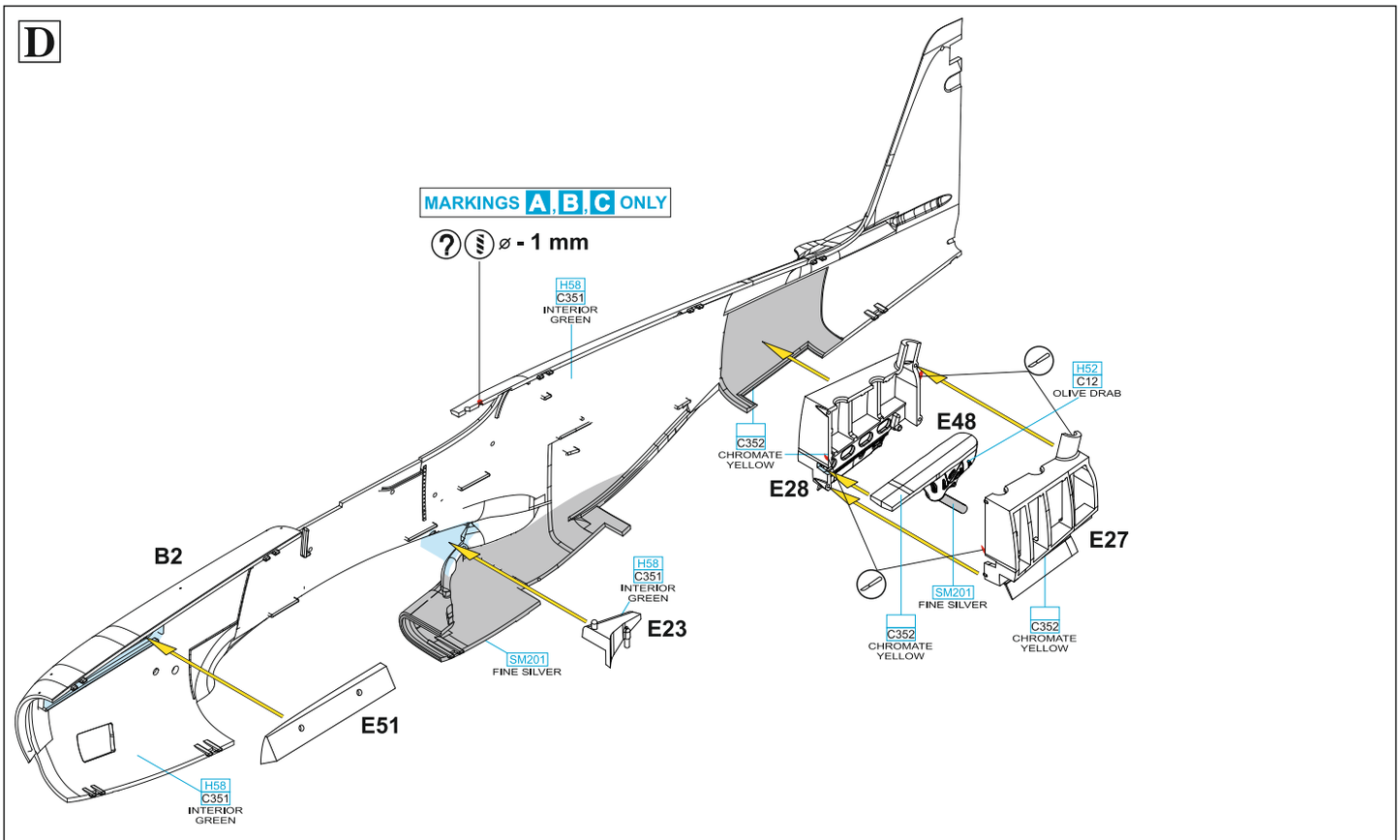
D
MARKINGS A,B,C ONLY
ø - 1 mm
H58
C351
INTERIOR
GREEN
B2
E51
H58
C351
INTERIOR
GREEN
SM201
FINE SILVER
H58
C351
INTERIOR
GREEN
E23
C352
CHROMATE
YELLOW
E28
E48
H52
C12
OLIVE DRAB
E27
SM201
FINE SILVER
C352
CHROMATE
YELLOW
C352
CHROMATE
YELLOW

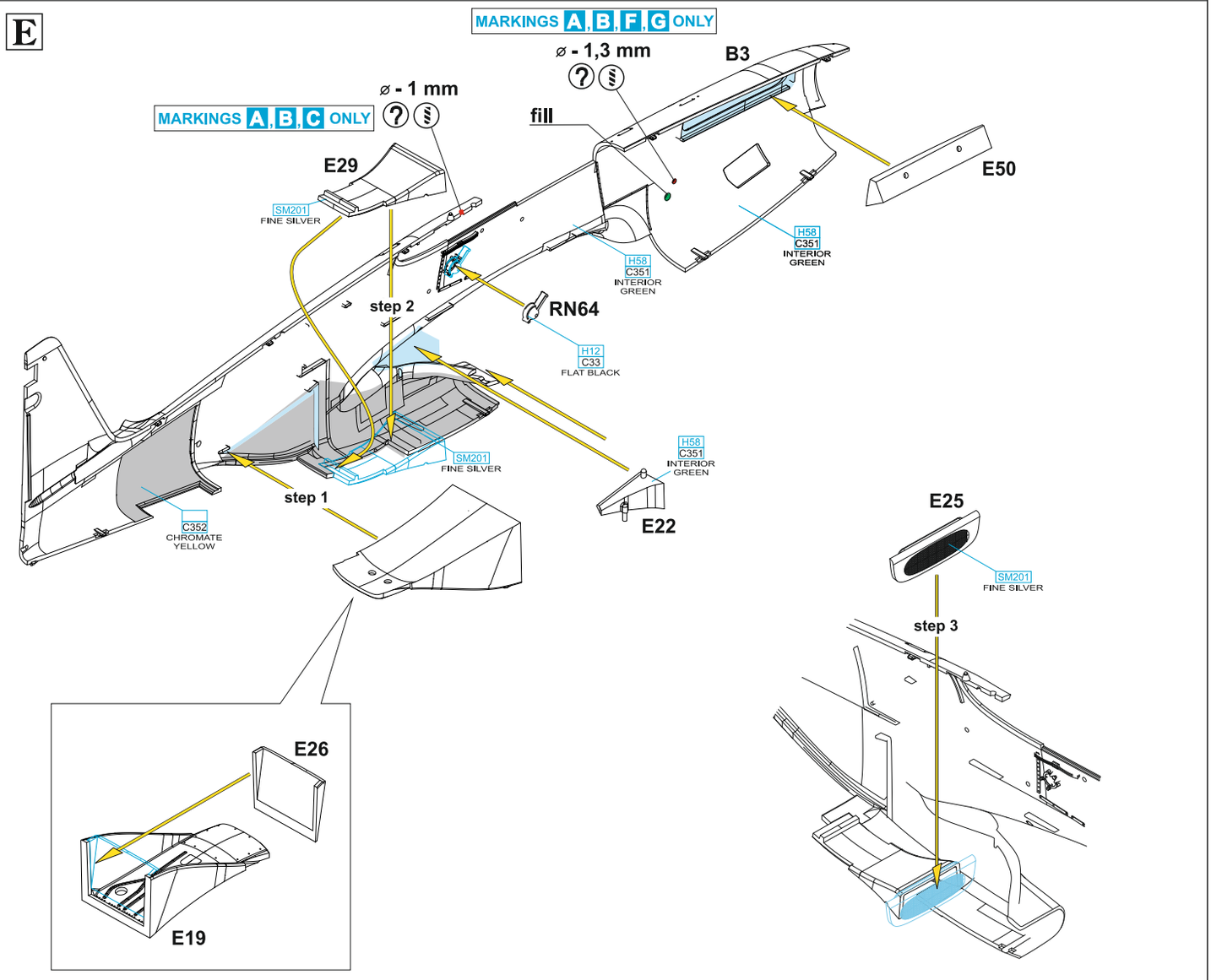
E
MARKINGS A,B,F,G ONLY
ø - 1,3 mm
B3
fill
E50
MARKINGS A,B,C ONLY
ø - 1 mm
E29
SM201
FINE SILVER
H58
C351
INTERIOR
GREEN
H58
C351
INTERIOR
GREEN
step 2
RN64
H12
C33
FLAT BLACK
H58
C351
INTERIOR
GREEN
SM201
FINE SILVER
step 1
C352
CHROMATE
YELLOW
E22
E25
SM201
FINE SILVER
step 3
E26
E19

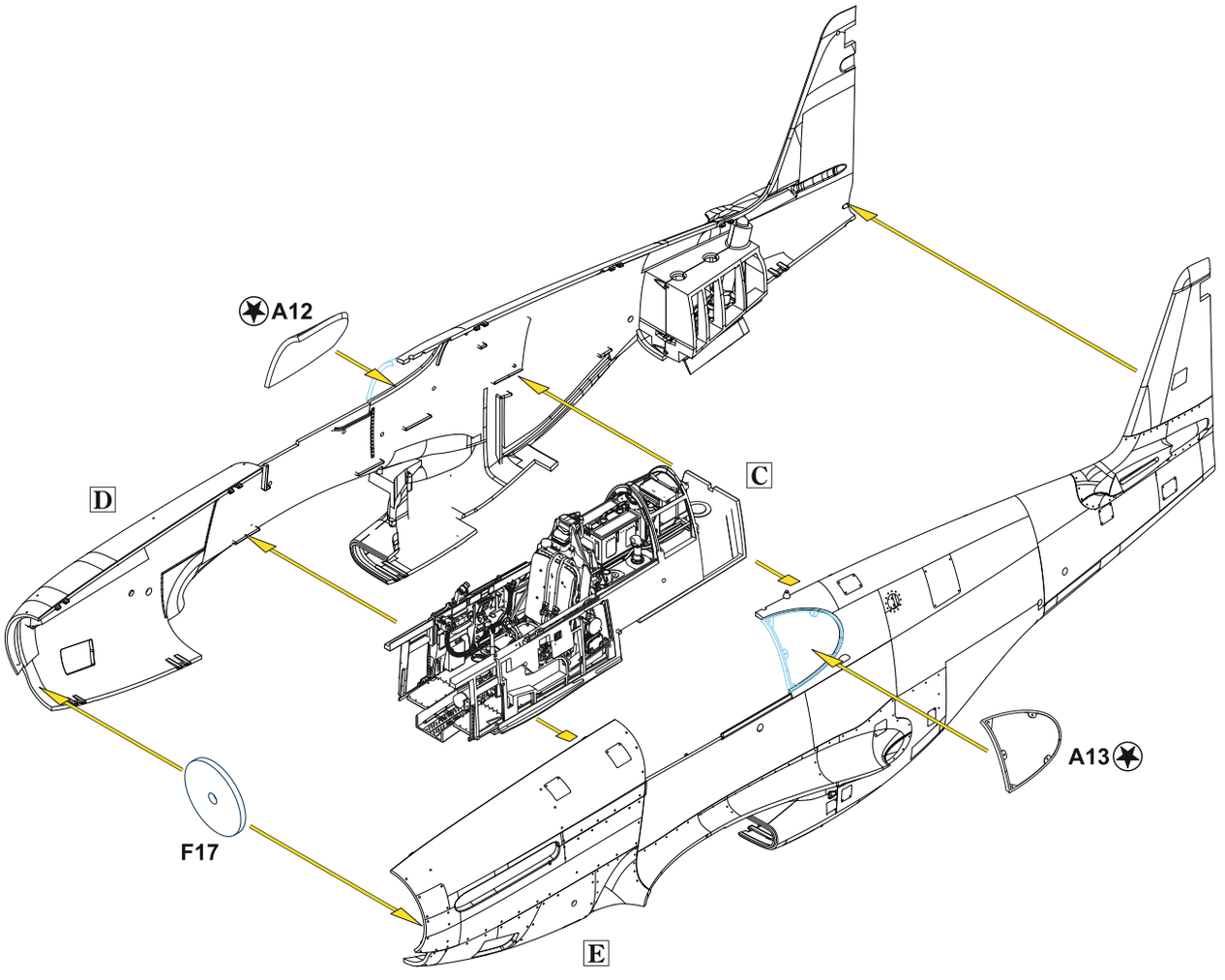

F

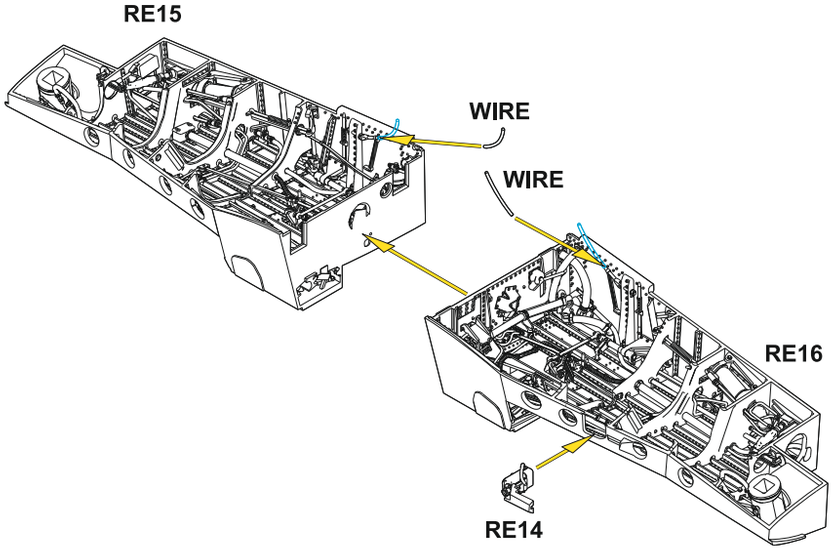

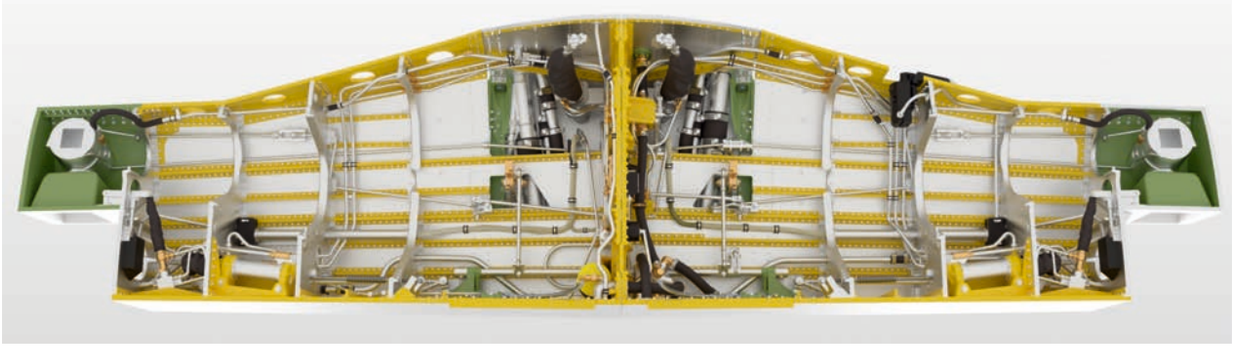

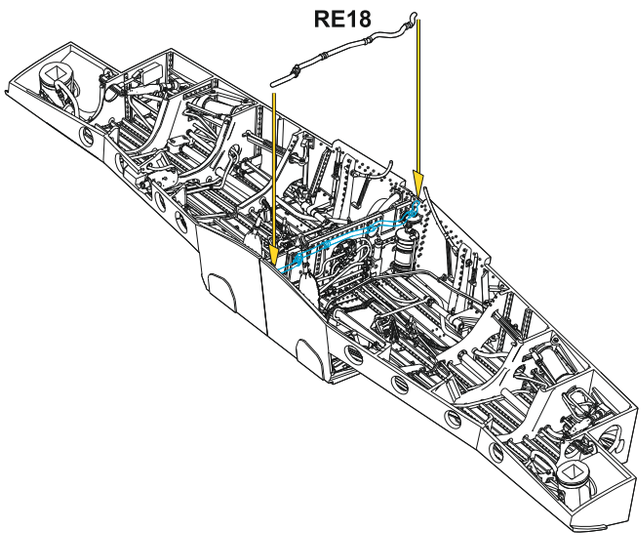
RE18

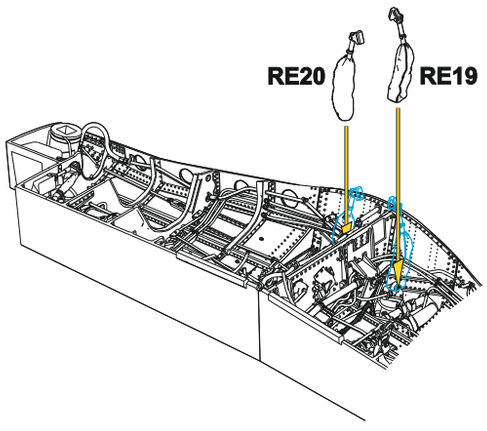
RE20
RE19

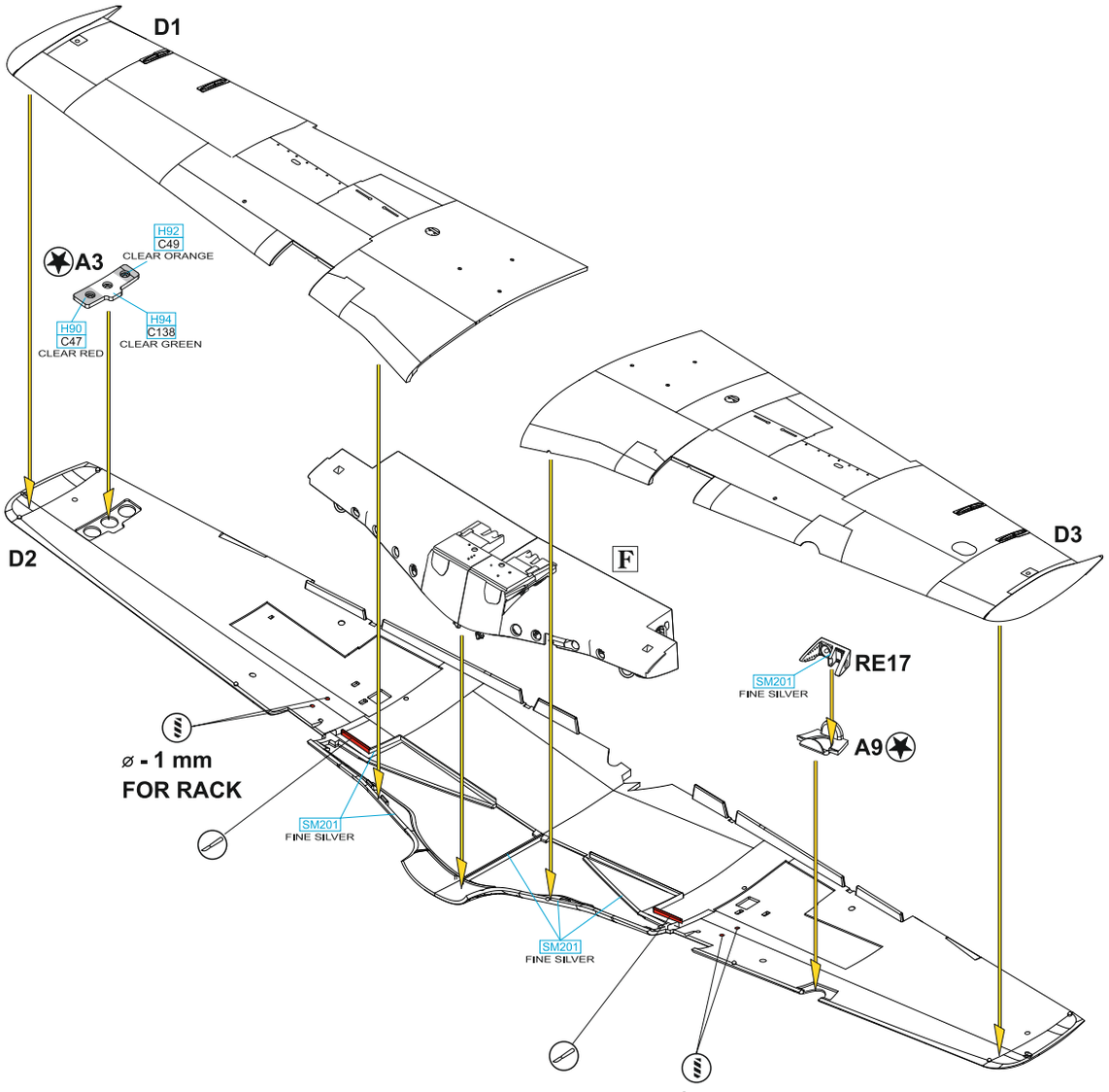
D1
A3
H92
C49
CLEAR ORANGE
H90
C47
CLEAR RED
H94
C138
CLEAR GREEN
D2
F
D3
RE17
SM201
FINE SILVER
A9
⌀ - 1 mm
FOR RACK
SM201
FINE SILVER
SM201
FINE SILVER
⌀ - 1 mm
FOR RACK

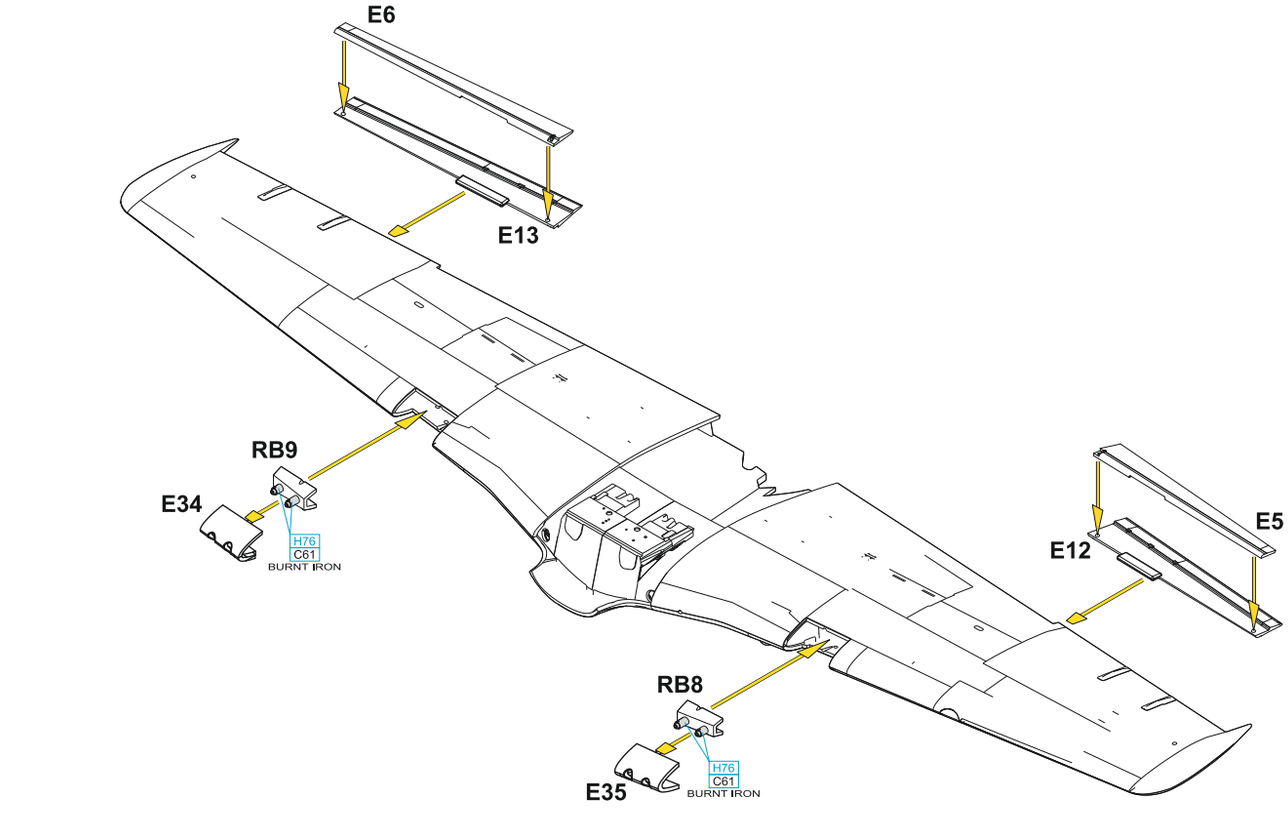
E6
E13
RB9
E34
H76
C61
BURNT IRON
E5
E12
RB8
E35
H76
C61
BURNT IRON

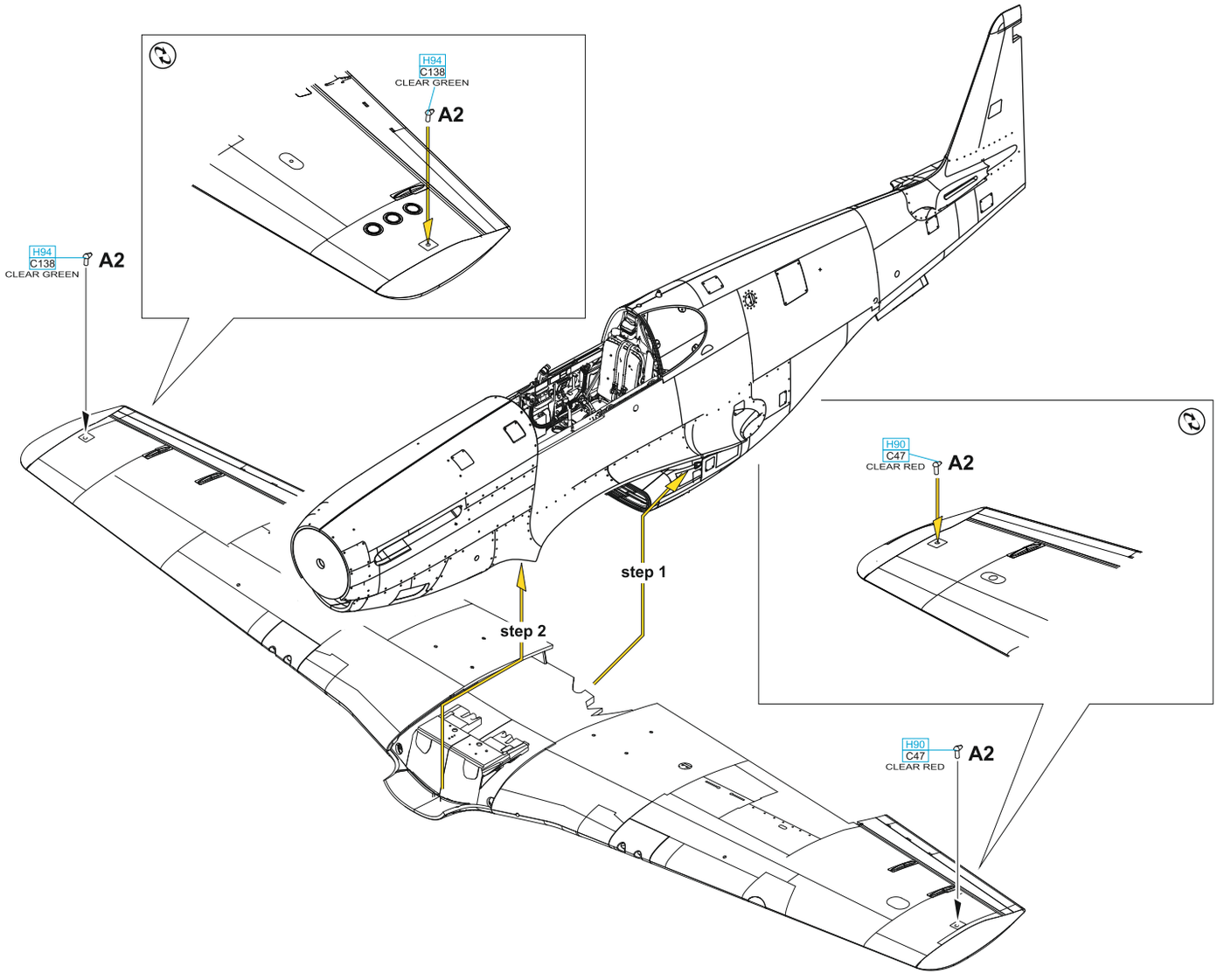
H94
C138
CLEAR GREEN
A2
H94
C138
CLEAR GREEN
A2
step 1
step 2
H90
C47
CLEAR RED
A2
H90
C47
CLEAR RED
A2

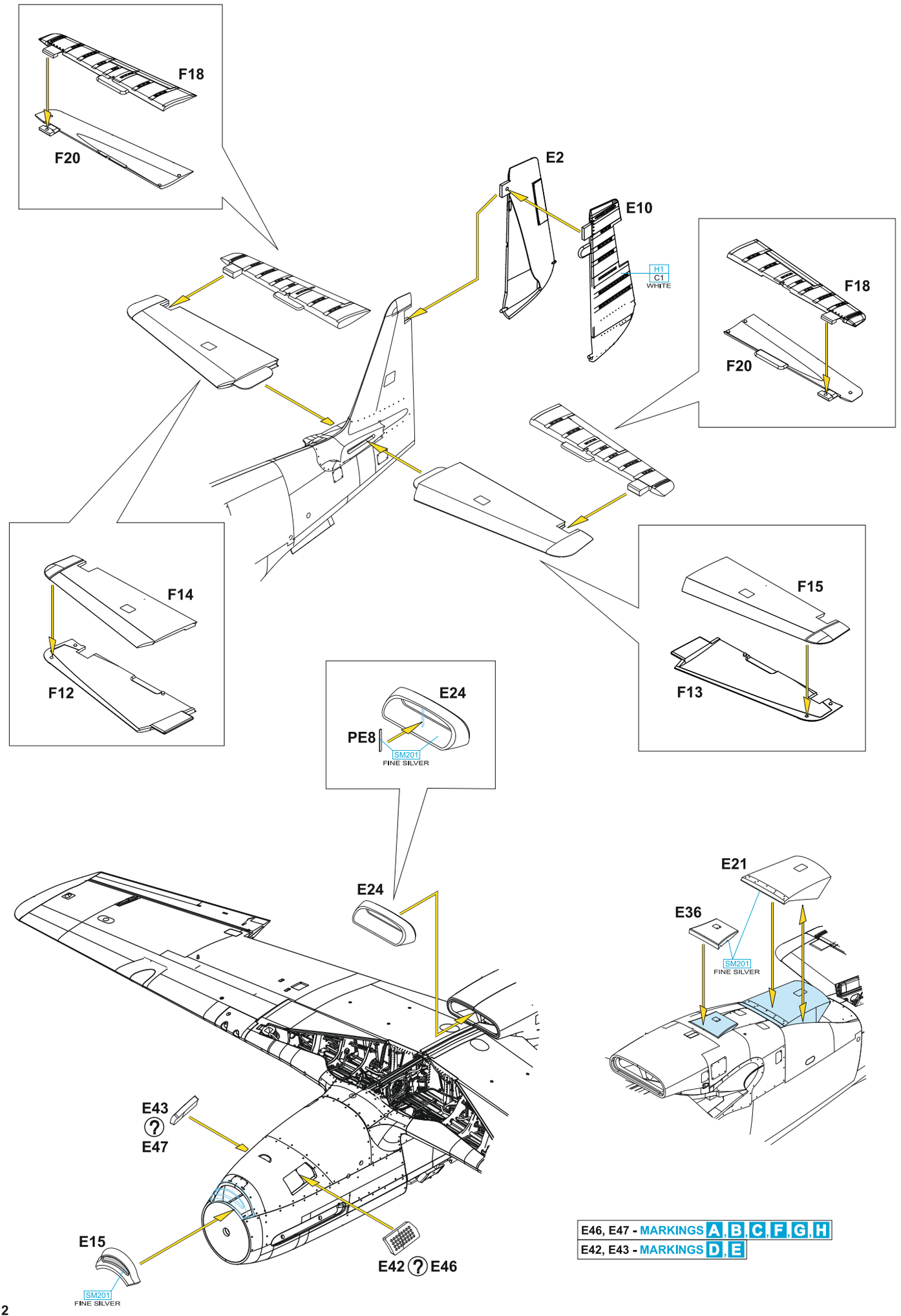

E46, E47 - MARKINGS A, B, C, F, G, H

E42, E43 - MARKINGS D, E

G

MARKINGS E, F, G, H ONLY

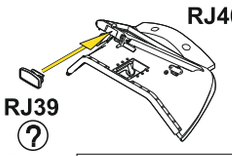

RJ41 - MARKING H ONLY

RJ40 ? E16, A20 - MARKINGS A, B, C, D, E, F, G

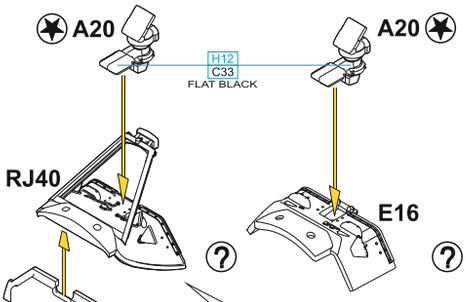

RJ40 ? E18, A19 - MARKING H

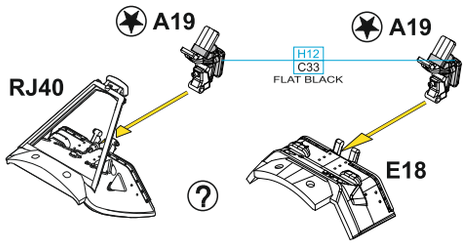

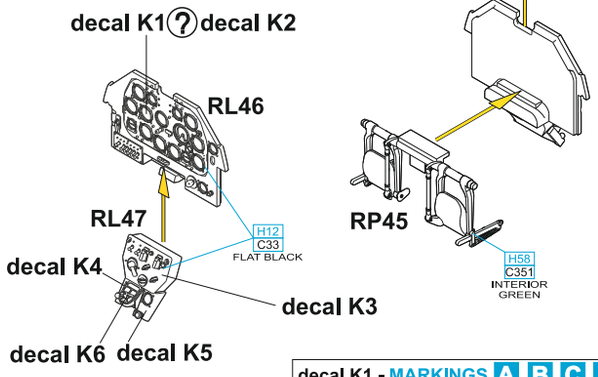

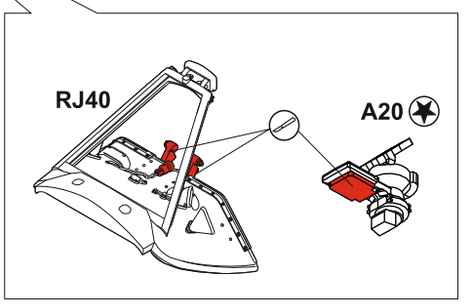

decal K1 - MARKINGS A, B, C, F, G

decal K2 - MARKINGS D, E, H

NOTE: Use only together with the part RP40

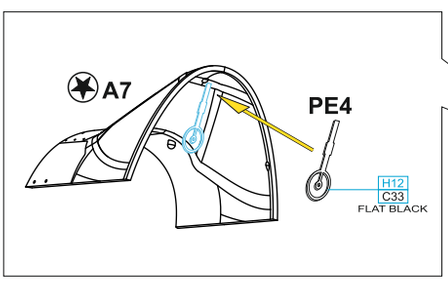

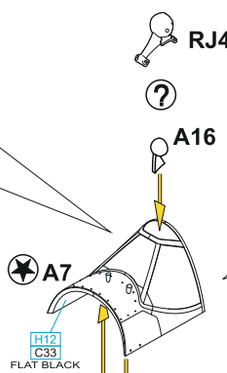

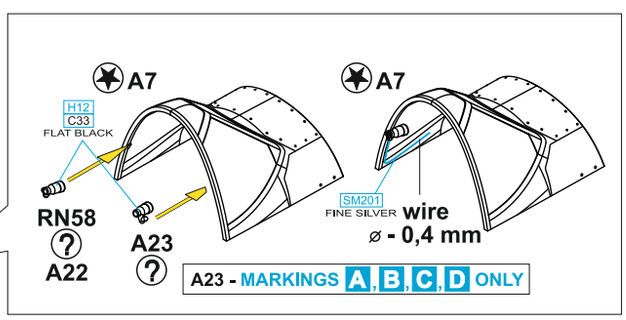

A23 - MARKINGS A, B, C, D ONLY

step 1

G

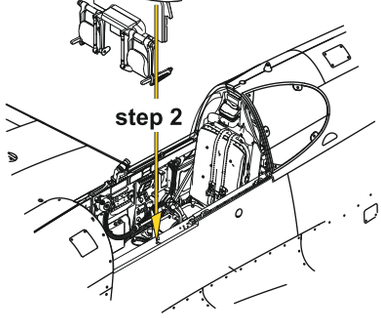





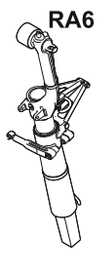
RA6

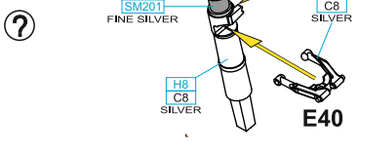

E11
E37
H8
C8
SILVER
SM201
FINE SILVER
H8
C8
SILVER
H8
C8
SILVER
E40

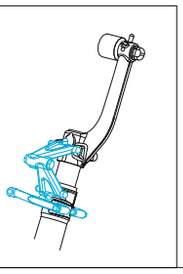

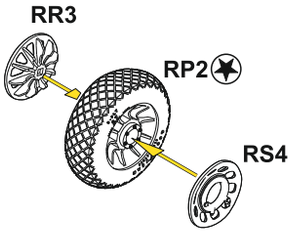
RR3
RP2
RS4


RA7



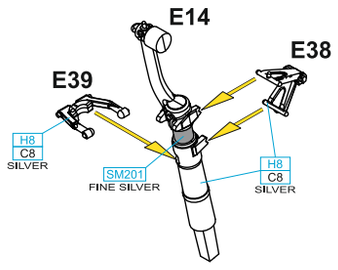
E14
E38
E39
H8
C8
SILVER
SM201
FINE SILVER
H8
C8
SILVER

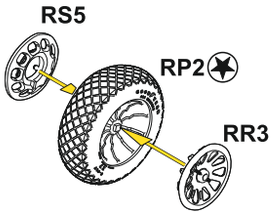
RS5
RP2
RR3

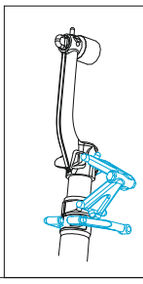

H

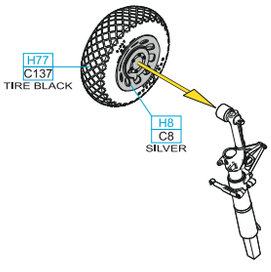
H77
C137
TIRE BLACK
H8
C8
SILVER

I

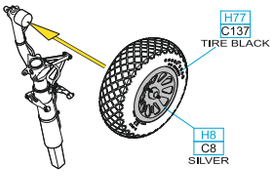
H77
C137
TIRE BLACK
H8
C8
SILVER

J

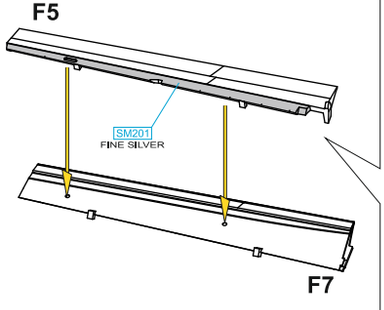
F5
SM201
FINE SILVER
F7

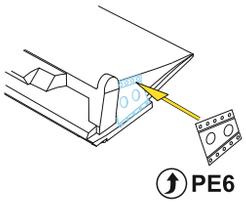
PE6

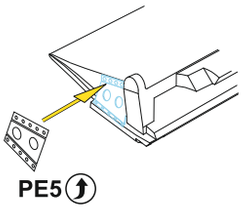
PE5

K

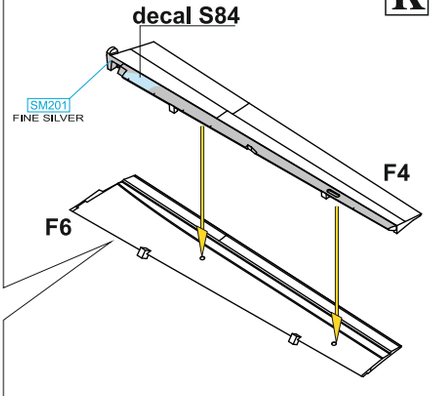
decal S84
SM201
FINE SILVER
F4
F6

L

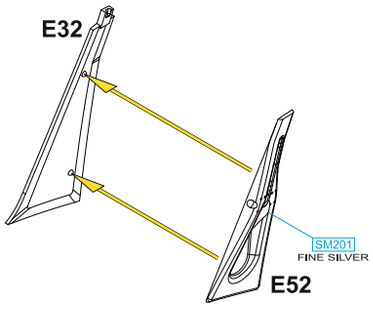
E32
SM201
FINE SILVER
E52

M

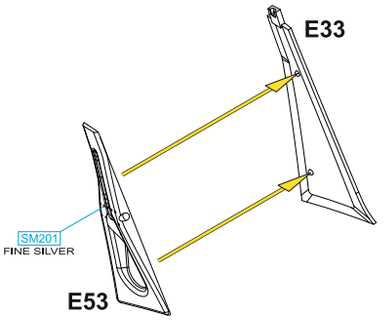
E33
SM201
FINE SILVER
E53

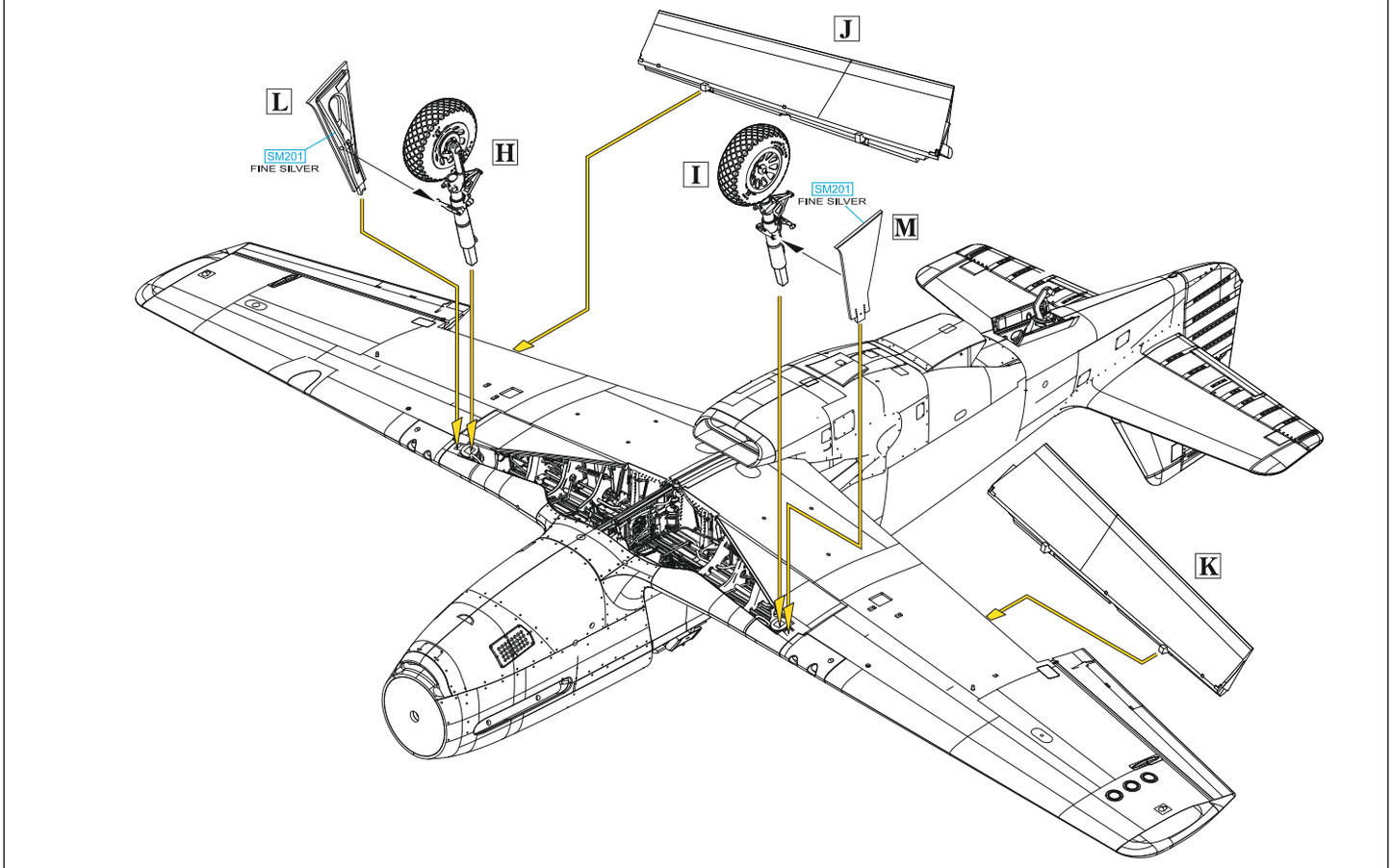
J
L
SM201
FINE SILVER
H
I
SM201
FINE SILVER
M
K

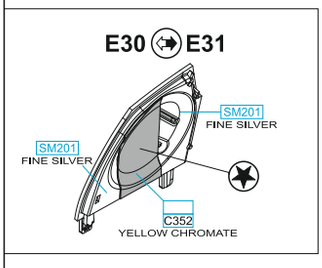
E30
E31
SM201
FINE SILVER
SM201
FINE SILVER
C352
YELLOW CHROMATE

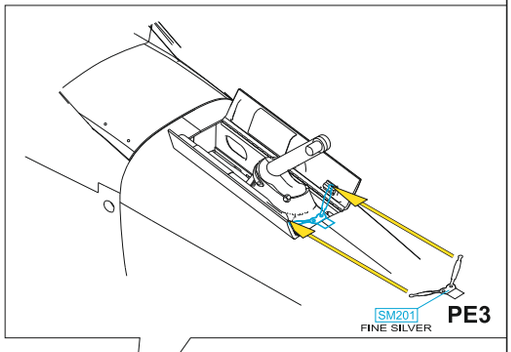
SM201
FINE SILVER
PE3

E31
E30
SM201
FINE SILVER
E2
H77
C137
TIRE BLACK
RP1
H8
C8
SILVER

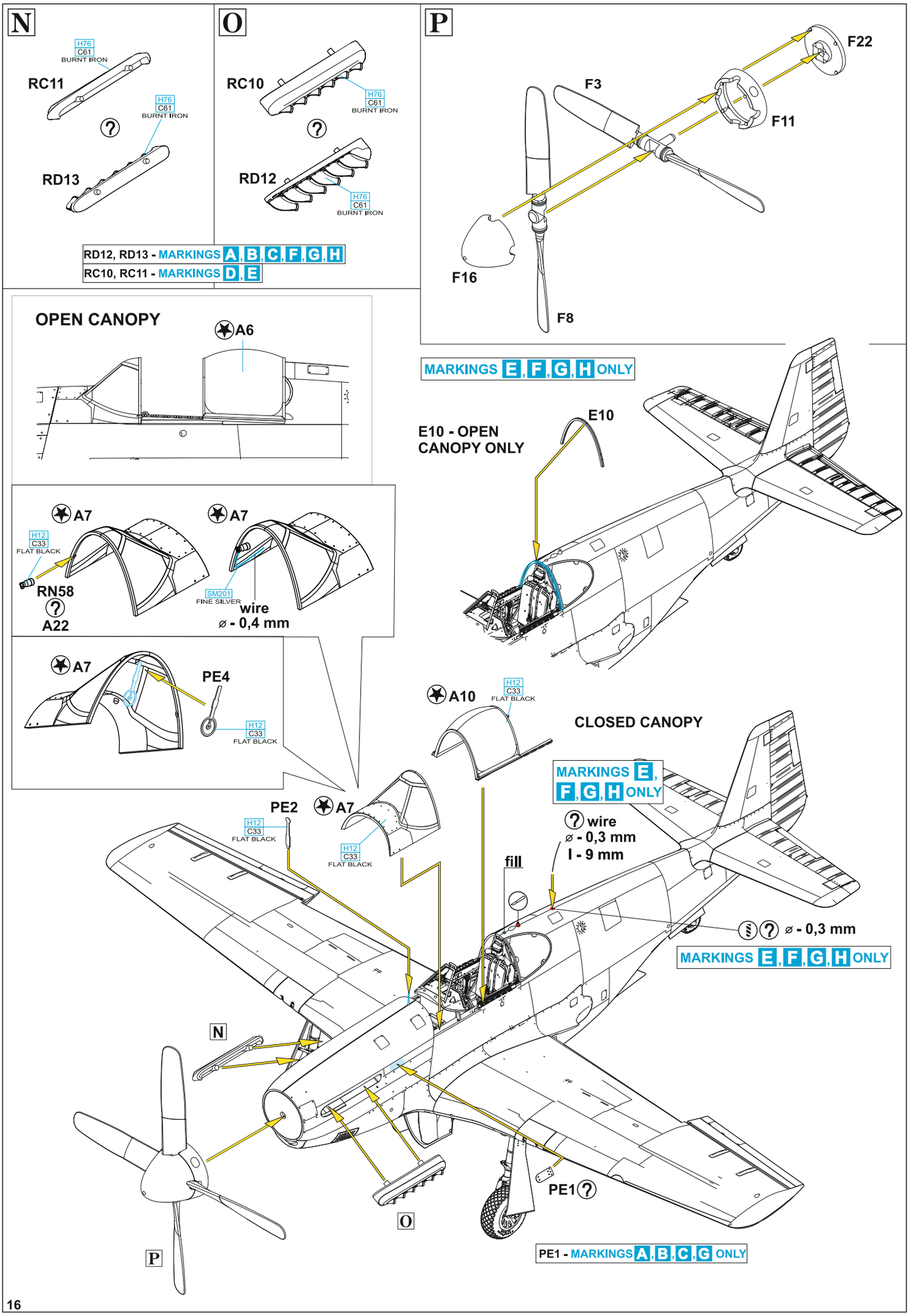
N
H76
C61
BURNT IRON
RC11
H76
C61
BURNT IRON
RD13
O
RC10
H76
C61
BURNT IRON
RD12
H76
C61
BURNT IRON
RD12, RD13 - MARKINGS A,B,C,F,G,H
RC10, RC11 - MARKINGS D,E
P
F22
F3
F11
F16
F8
OPEN CANOPY
A6
MARKINGS E,F,G,H ONLY
E10
E10 - OPEN CANOPY ONLY
A7
H12
C33
FLAT BLACK
RN58
A22
A7
SM201
FINE SILVER
wire
⌀ - 0,4 mm
A7
PE4
H12
C33
FLAT BLACK
A10
H12
C33
FLAT BLACK
CLOSED CANOPY
MARKINGS E, F,G,H ONLY
PE2
H12
C33
FLAT BLACK
A7
H12
C33
FLAT BLACK
wire
⌀ - 0,3 mm
l - 9 mm
fill
⌀ - 0,3 mm
MARKINGS E,F,G,H ONLY
N
O
P
PE1
PE1 - MARKINGS A,B,C,G ONLY

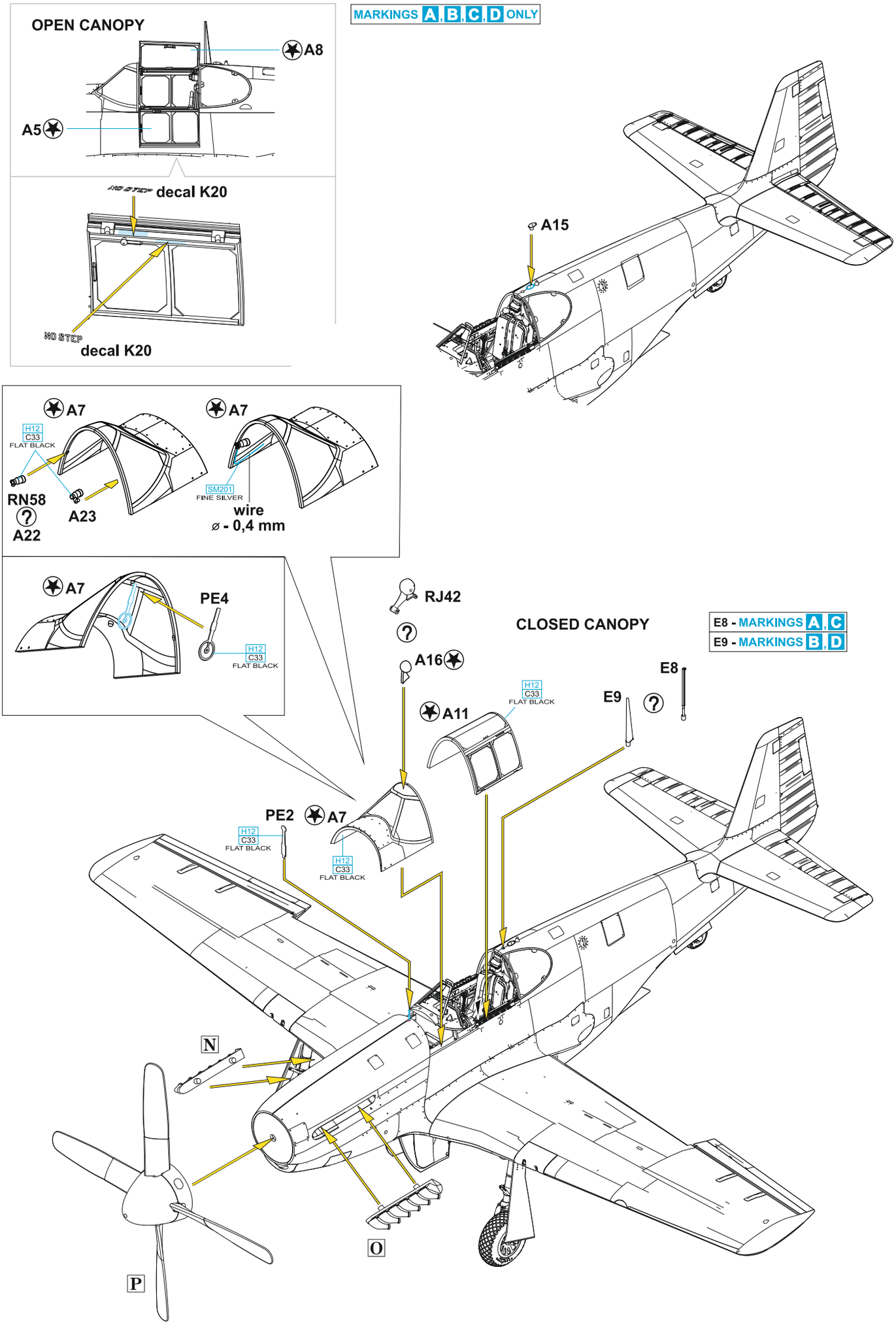
OPEN CANOPY
A8
A5
NO STEP decal K20
NO STEP
decal K20
MARKINGS A, B, C, D ONLY
A15
A7
H12
C33
FLAT BLACK
RN58
A22
A23
A7
SM201
FINE SILVER
wire
⌀ - 0,4 mm
A7
PE4
H12
C33
FLAT BLACK
RJ42
CLOSED CANOPY
E8 - MARKINGS A, C
E9 - MARKINGS B, D
A16
A11
H12
C33
FLAT BLACK
E9
E8
PE2
A7
H12
C33
FLAT BLACK
H12
C33
FLAT BLACK
N
O
P

Q

2 pcs.

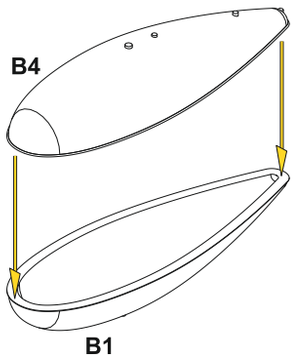
B4
B1

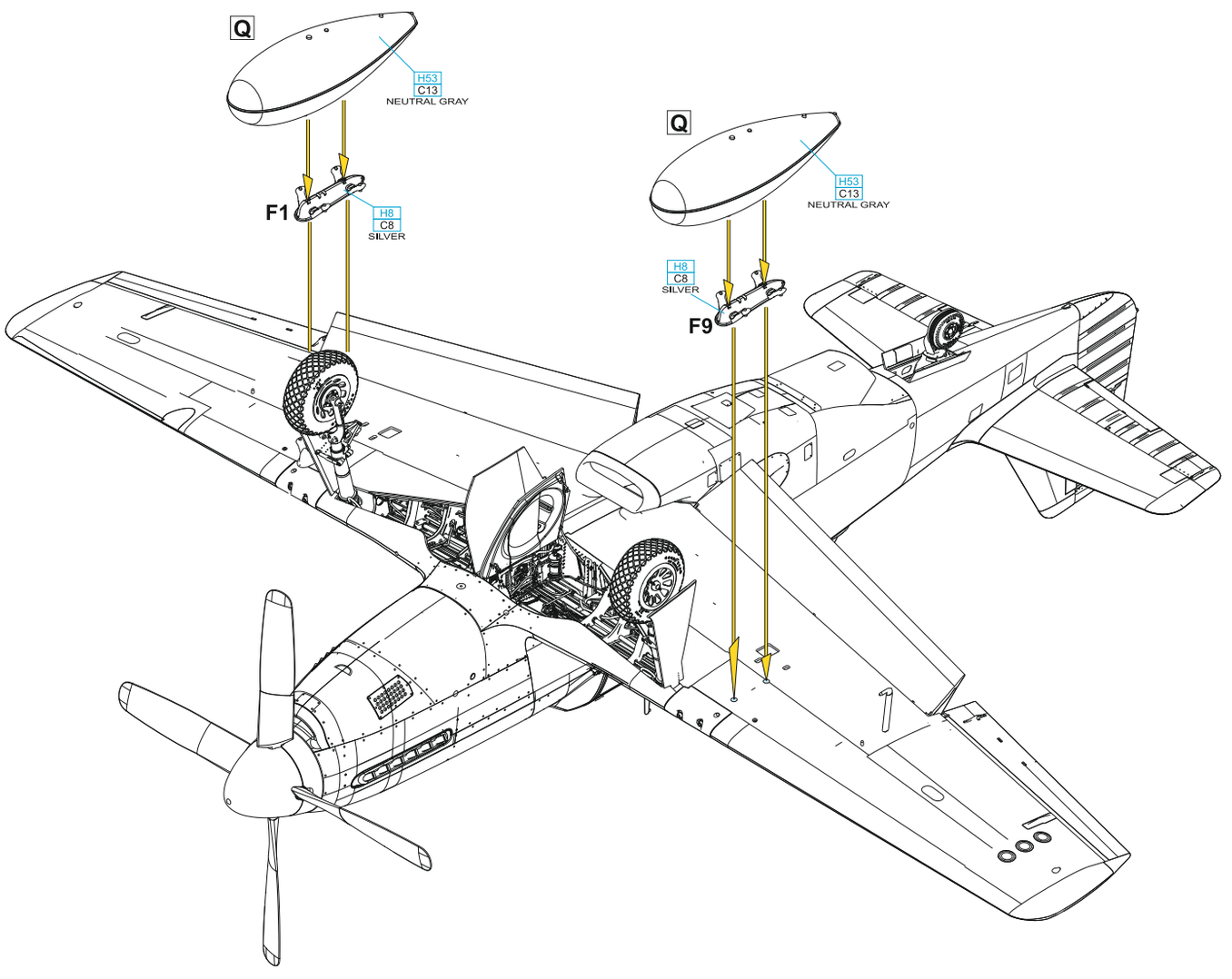
Q
H53
C13
NEUTRAL GRAY
F1
H8
C8
SILVER
Q
H53
C13
NEUTRAL GRAY
H8
C8
SILVER
F9

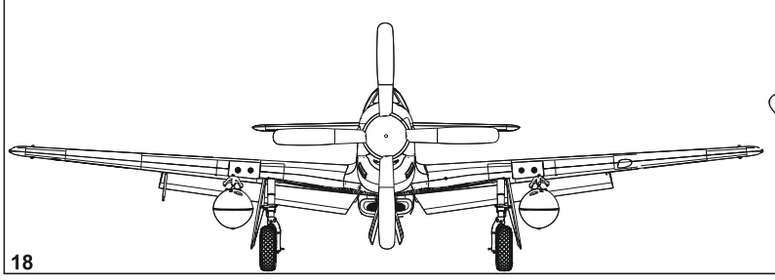

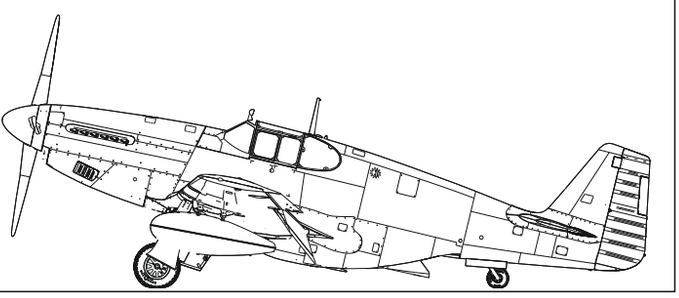

eduard
MASK
932011

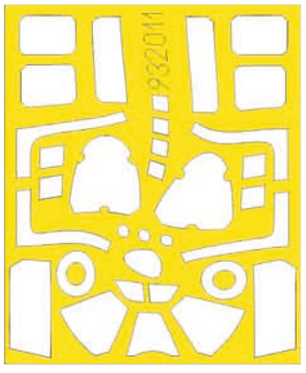



A6
?
A13 A10 A7

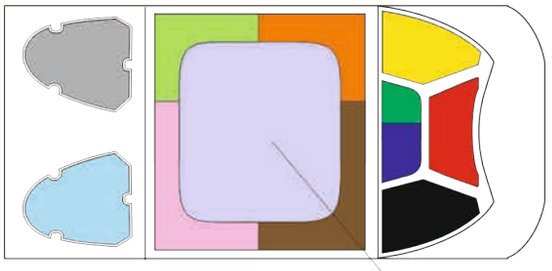

A12

LIQUID MASK



A11
?
A13 A5, A8 A7

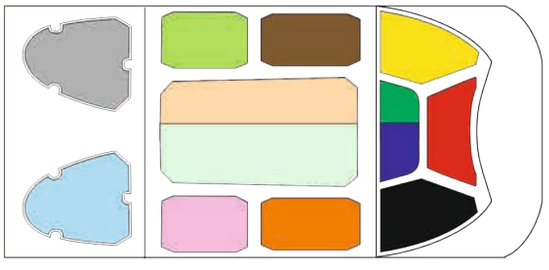

A12



A20 A19 A3

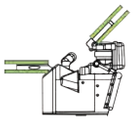

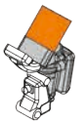



RP1 A9

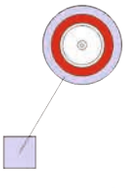

LIQUID MASK

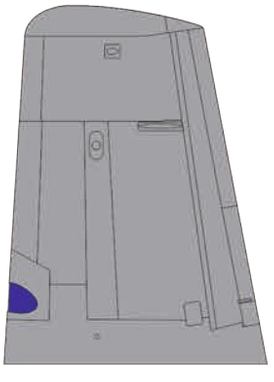

A P-51B-5-NA, s/n 43-6819, Capt. Duane W. Beeson, 334th FS, 4th FG, 8th AF, Debden, United Kingdom, March–April 1944

Duane Willard Beeson was one of only ten pilots to achieve fighter ace status within the USAAF with two different types of aircraft. In his case, these were the P-47 and the P-51. He scored a total of 17.3 kills, 12 of which were achieved with the P-47C/D and 5.3 with the P-51B. The Idaho native, like many others, did not meet the Air Force requirement of at least two years of college, so he enlisted in the Canadian Air Force, which accepted him into its ranks on January 23, 1941. After moving to England, he retrained as a Hurricane and was assigned to No. 71 Squadron at Debden on September 5, 1942. After the formation of the 4th FG with the Eagle Squadrons as a base, Beeson flew with the 334th FS and achieved his first kill on May 18, 1943. After flying 80 missions, he became B Flight Commander and was assigned his first P-51B, which he named Bee, on February 28, 1944. On April 5, he first achieved one third of the Ju 88 shoot-down near Brandenburg but then was hit by flak and captured. Shortly after the war he was diagnosed with a brain tumor and died prior to a surgery aged 25.

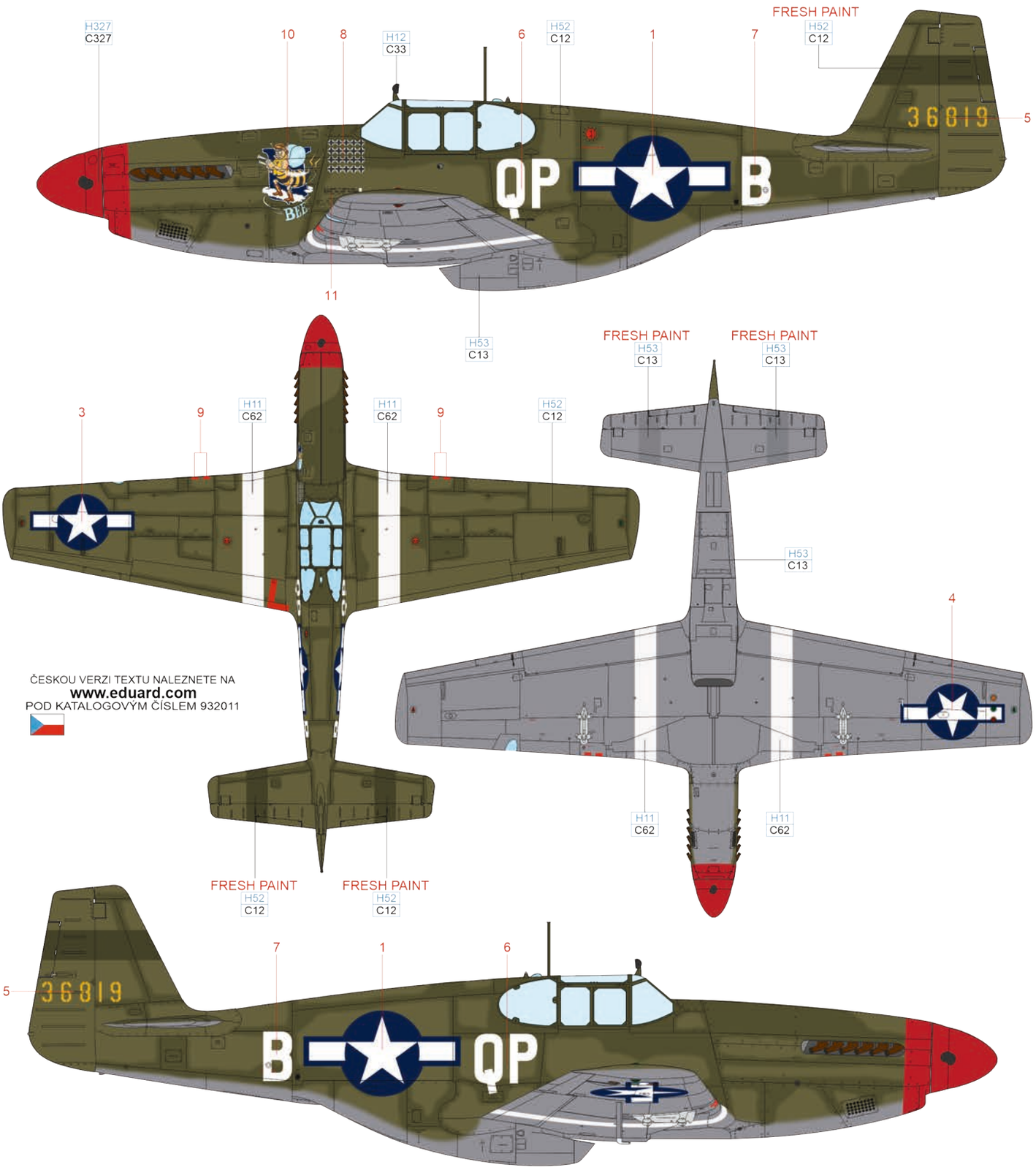

OLIVE DRAB H52 C12 | NEUTRAL GRAY H53 C13 | FLAT WHITE H11 C62 | RED H327 C327 | FLAT BLACK H12 C33

B P-51B-10-NA, s/n 42-106448, Capt. Henry W. Brown, 354th FS, 355th FG, 8th AF, Steeple Morden, United Kingdom, June 1944

"Baby" Brown was a fighter ace with 14.2 kills, damaging three other aircraft. On the ground he destroyed 14.5 and damaged 10. He achieved four wins with the Thunderbolt, the others on the Mustang. He became the 355th FG's fifth ace fighter on April 24, 1944, and by May 13, he even held the status of the most successful fighter of the entire group. Returning from leave, he then became the most successful fighter of the entire 8th Air Force in late August after destroying eight aircraft on the ground and seven in the air in a 30-day period. Further increases in his score were halted by a German flak hit that forced Brown to make an emergency landing on enemy soil on October 3, 1944. His commander, Maj. Chuck Lenfest (5.5 kills), landed nearby to rescue him, but his Mustang bogged down in the mud and both pilots eventually fell into captivity. He remained in the service after the war and led the F-111 development program at Nellis AFB. Later he was commander of the 48th TFW and deputy commander of operations for the 7th AF during the Vietnam War. He retired in 1974 and died on February 19, 2008 at the age of 85.

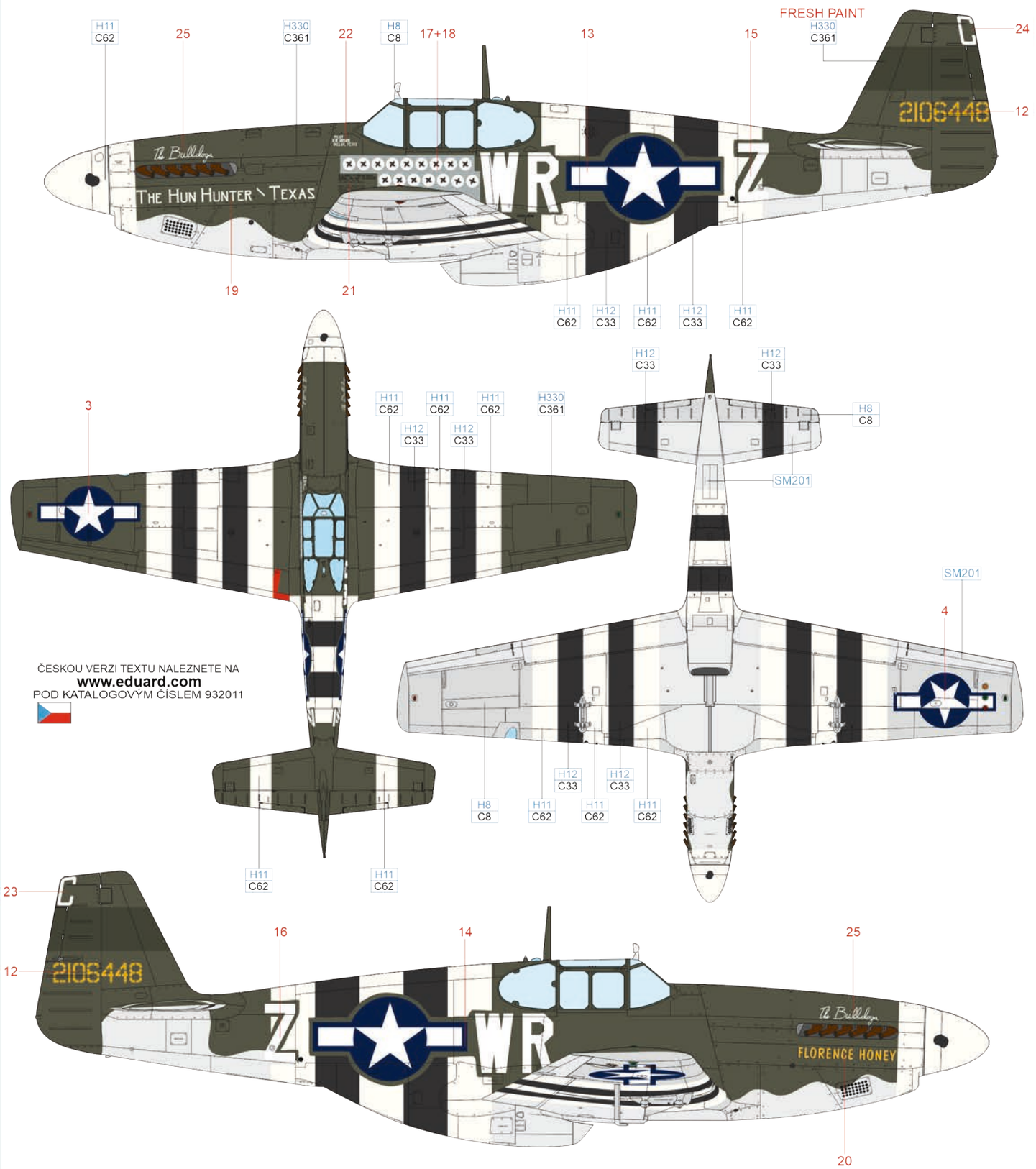

ČESKOU VERZI TEXTU NALEZNETE NA
www.eduard.com
POD KATALOGOVÝM ČÍSLEM 932011

DARK GREEN H330 C361 | FLAT BLACK H12 C33 | FLAT WHITE H11 C62 | SILVER H8 C8 | SUPER FINE SILVER 2 SM201

C P-51B-10-NA, s/n 43-6934, Capt. Henry White, 328th FS, 352nd FG, 8th AF, Bodney, United Kingdom, June 1944

The 352nd Fighter Group was formed on September 29, 1942 and activated three days later on October 1. Its first commander was Lt. Col. Edwin M. Ramage. The 328th, 486th, and 487th Fighter Squadrons, all initially flying P-47s before rearming to P-51B, were part of the group. During June and July, the group moved from the USA to the UK. The first commander of the 328th Fighter Squadron was Capt. J. H. Posten, the most famous of the commanders was Maj. G. E. Preddy, the most successful American P-51 fighter pilot with 26.83 confirmed kills. Capt. Henry White flew a total of 89 operational sorties with the unit, recording two kills. He achieved the first on May 28, 1944, and the second on July 18. The entire squadron scored 143 kills, 14 were destroyed probably and 35 damaged by its pilots on the ground during the war. Captain White's P-51B bore the distinctive livery of "Blue-nosed Bastards of Bodney", as the 352nd FG was nicknamed after the blue noses of its aircraft. On the left side forward of the cockpit, a painting of a girl in a red bikini and the name Dallas Darling adorned the nose. Full invasion stripes are portrayed here.

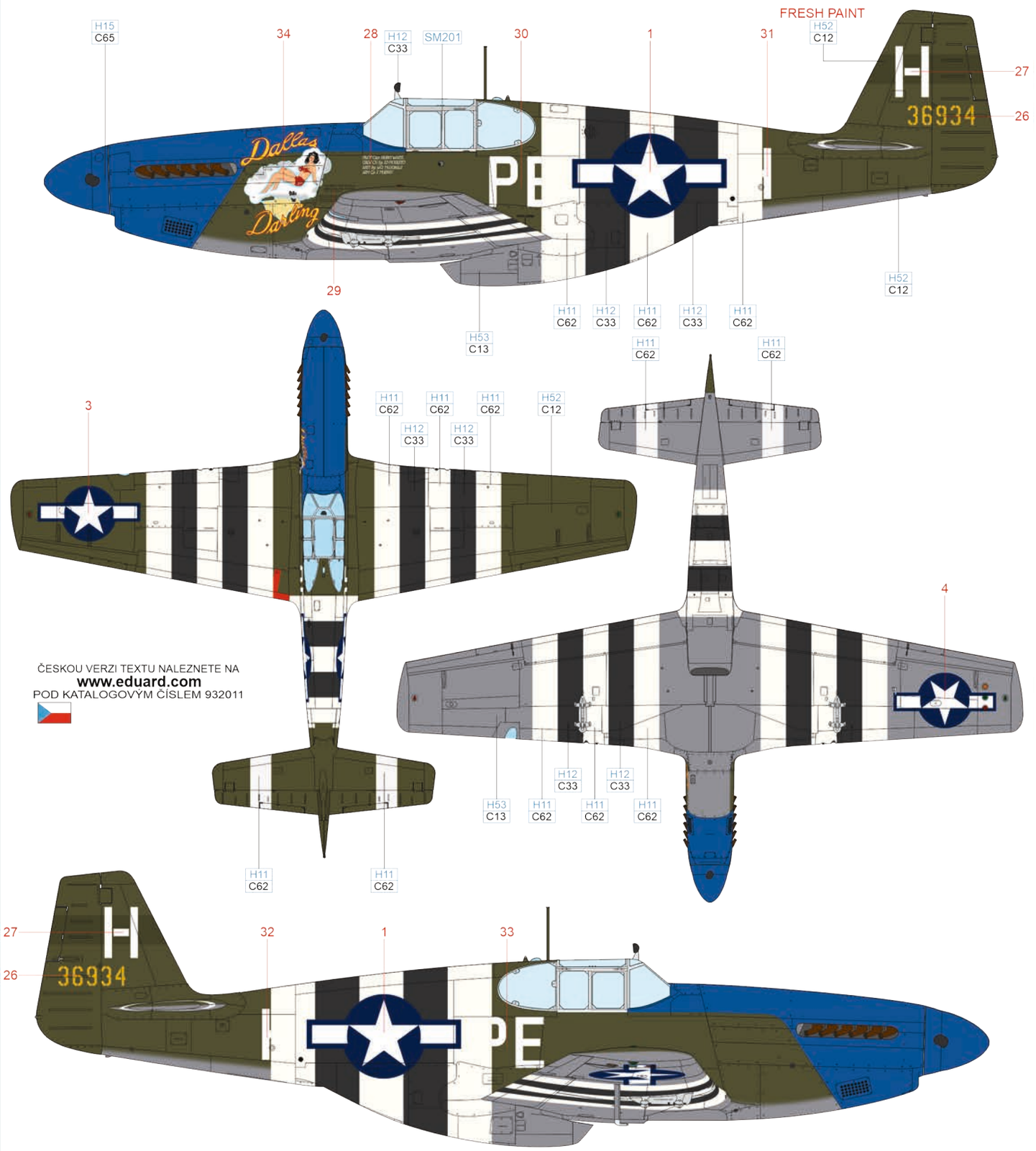

BRIGHT BLUE H15 C65
OLIVE DRAB H52 C12
NEUTRAL GRAY H53 C13
FLAT WHITE H11 C62
FLAT BLACK H12 C33
SUPER FINE SILVER 2 SM201

D P-51B-15-NA, s/n 42-106839, Lt. Robert Eckfeldt, 374th FS, 361st FG, 8th AF, Bottisham, United Kingdom, June–July 1944

The 361st FG was established on February 10, 1943 and its pilots retrained on the P-47. They moved to England to the Bottisham base in November that year. The pilots of the 361st FG flew their first combat mission on January 21, 1944. By May, the unit had already re-equipped to the P-51s and moved to Little Walden Air Force Base on September 26, 1944. From early February until May 1945, the group operated out of Chièvres, Belgium, and its pilots destroyed 222 enemy aircraft in the air, probably destroyed 11 and damaged 67 during the combat deployment. Among the group's aces was Lt. Robert Eckfeldt, who scored three aerial victories and destroyed four more enemy aircraft on the ground. This is matched by the seven symbols under the cockpit of his aircraft named Bald Eagle, a nickname for the 22-year-old pilot, referring to his thinning hair despite his youth. "Eggie," as his colleagues also called him, was the son of an Army Major General and hailed from Belmont, Massachusetts.

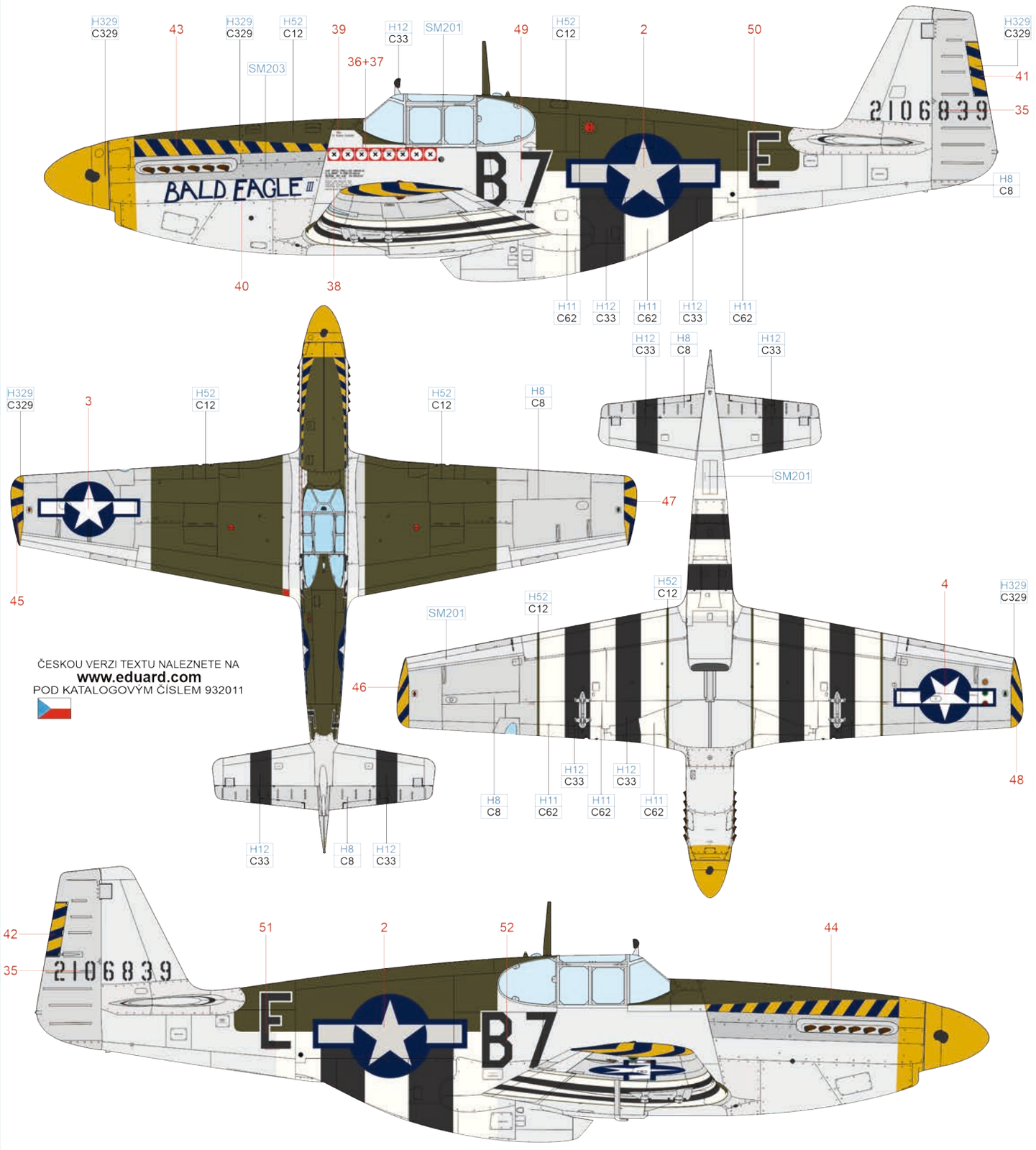

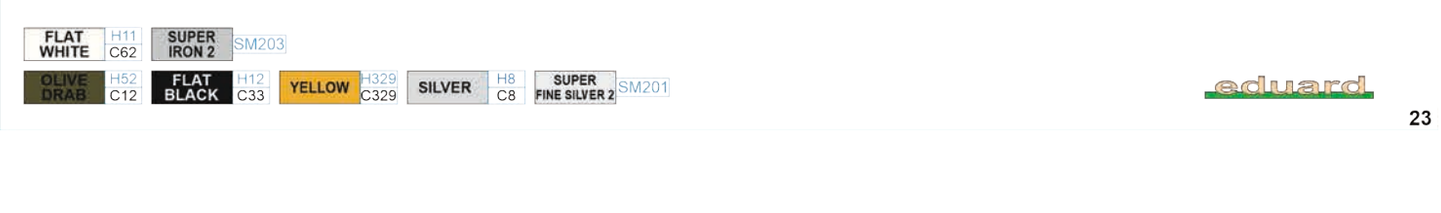

FLAT WHITE H11 C62 | SUPER IRON 2 SM203
OLIVE DRAB H52 C12 | FLAT BLACK H12 C33 | YELLOW H329 C329 | SILVER H8 C8 | SUPER FINE SILVER 2 SM201

E P-51B-15-NA, s/n 42-106924, 2nd Lt. Ralph K. Hofer, 334th FS, 4th FG, 8th AF, Debden, United Kingdom, June 1944

Light-hearted, perhaps undisciplined, but all the more courageous and charismatic was "Kid" Hofer, one of the USAAF's most successful fighters. The nickname was based on his youthful appearance and flowing and by Army standards long hair as well as his prevailing good humor. Until his death, he destroyed 15 enemy aircraft in the air, damaging two and destroying another 14 on the ground. On July 2, 1944, "Kid" participated in the escort of bombers to Budapest from the Italian base Foggia. Prior to reaching the target area, a group of Bf 109 entered the scene and the aerial battle started. Hofer's leader had to make an emergency landing due to a malfunction and watched from the ground as a Hungarian Bf 109, sitting on the tail of his Wingman, opened fire. Hofer's Mustang was apparently only damaged and so he tried to return to the base. Near Mostar, he decided to strafe a German airfield, his P-51B, named Salem Representative, was hit by flak and "Kid" Hofer was killed.

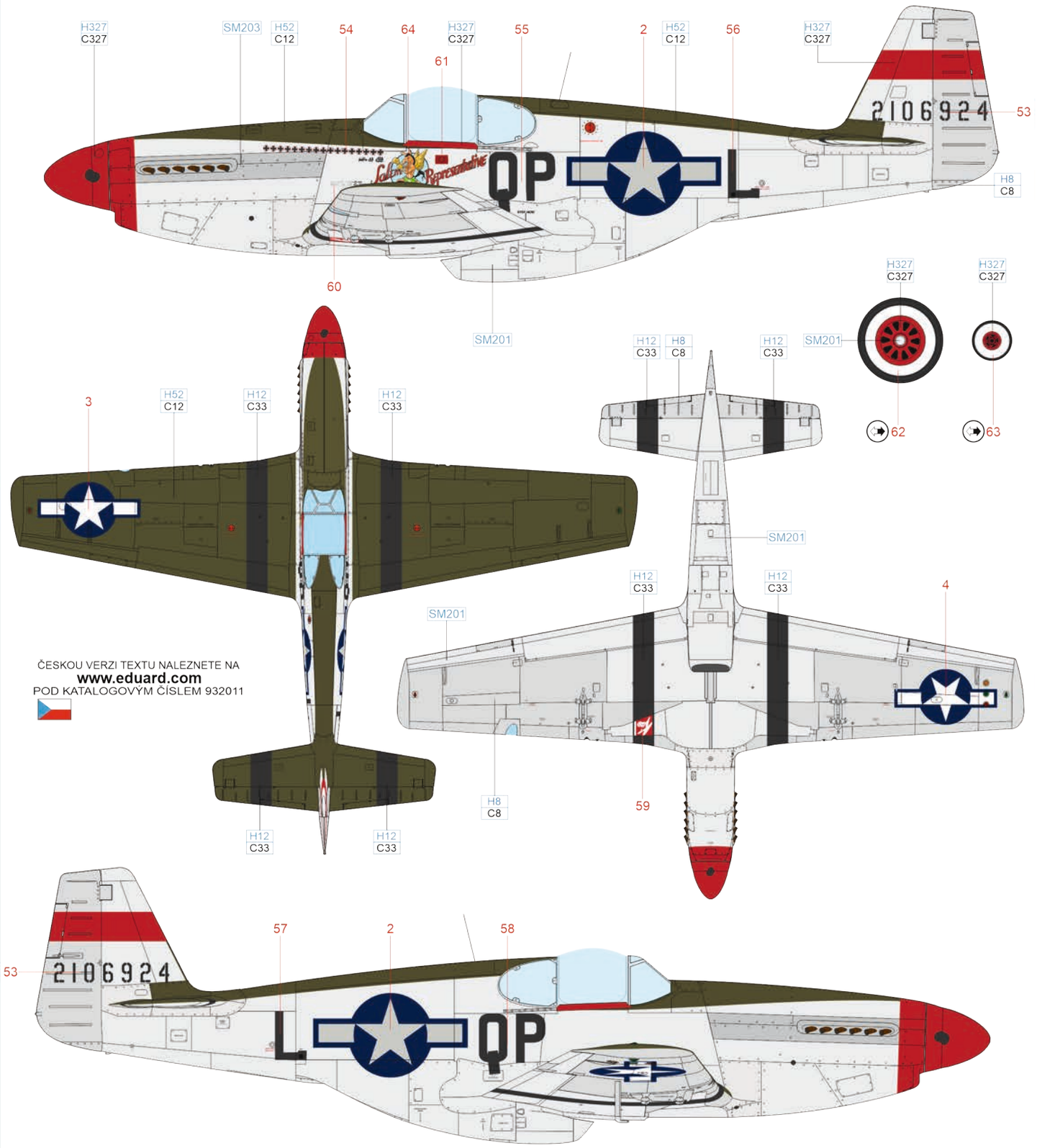

ČESKOU VERZI TEXTU NALEZNETE NA
www.eduard.com
POD KATALOGOVÝM ČÍSLEM 932011

FLAT BLACK	H12 C33	SUPER FINE SILVER 2	SM201				
OLIVE DRAB	H52 C12	SILVER	H8 C8	RED	H327 C327	SUPER IRON 2	SM203

F P-51B-5-NA, s/n 43-6425, Maj. Jack T. Bradley, CO of 353rd FS, 354th FG, 9th AF, A.2 Criqueville, France, June 1944

Jack Bradley became an Army pilot with the rank of 2nd Lt on August 27, 1942, and was assigned to the 384th FG/353rd FS on January 18 the following year. After moving to England, he achieved his first kill out of 15 confirmed (plus three probable and 12.66 damaged) on December 20. With Margie Maru carrying code FT B, he achieved his first success on December 30, when he contributed a third of the damage to Do 217. Bradley was promoted to Captain in mid-January and took command of the 353rd FS at the end of the month. He kept the position until June 30, when he left for the USA for leave and took the post again on his return. He subsequently served as deputy CO of the 354th FG and at the end of the war, already at the rank of Lieutenant Colonel, became the CO. After the war he stayed with the Air Force, retiring from the Reserves in December 1962. His Margie Maru is shown in a state where it bore the symbols of 15 kills, the invasion stripes on the fuselage were painted very carelessly. The aircraft was subsequently given the designation FT W and the name Edgewood's Entry.

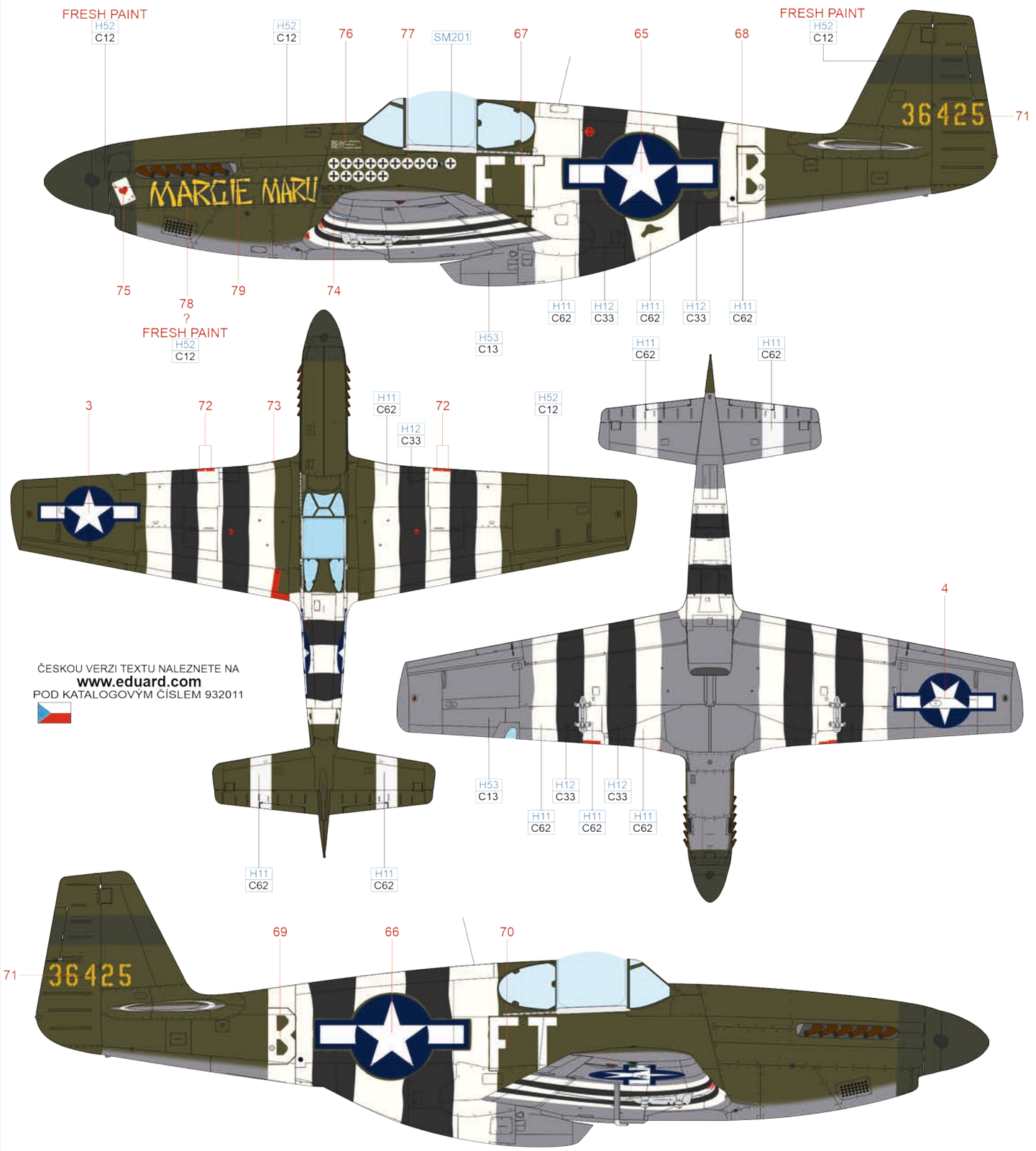

OLIVE DRAB H52 C12 | NEUTRAL GRAY H53 C13 | FLAT WHITE H11 C62 | FLAT BLACK H12 C33 | SUPER FINE SILVER 2 SM201

G P-51B-10-NA, s/n 43-6688, 1Lt. Arval J. Roberson, 362nd FS, 357th FG, 8th AF, Leiston, United Kingdom, June 1944

"Robby" Robertson joined the ranks of the Army Reserves in June 1942 and was officially an Army pilot on May 20, 1943. He was assigned to the 362nd FS, with which he subsequently flew 76 missions. In all, he scored six confirmed victories over German fighters, with another remaining unconfirmed. During the Korean War, he credited himself with another 100 combat missions as a member of the 12th FBS/18th FBG. Already at the rank of Lieutenant Colonel, he added 26 more missions with the C-47. Robertson retired in 1973 as the last commander of Otis Air Force Base before its closure. His P-51B Mustang, serial number 43-6688, was the first of two aircraft named the Passion Wagon (the other was P-51D 44-13691), and Robertson achieved all of his kills with it.

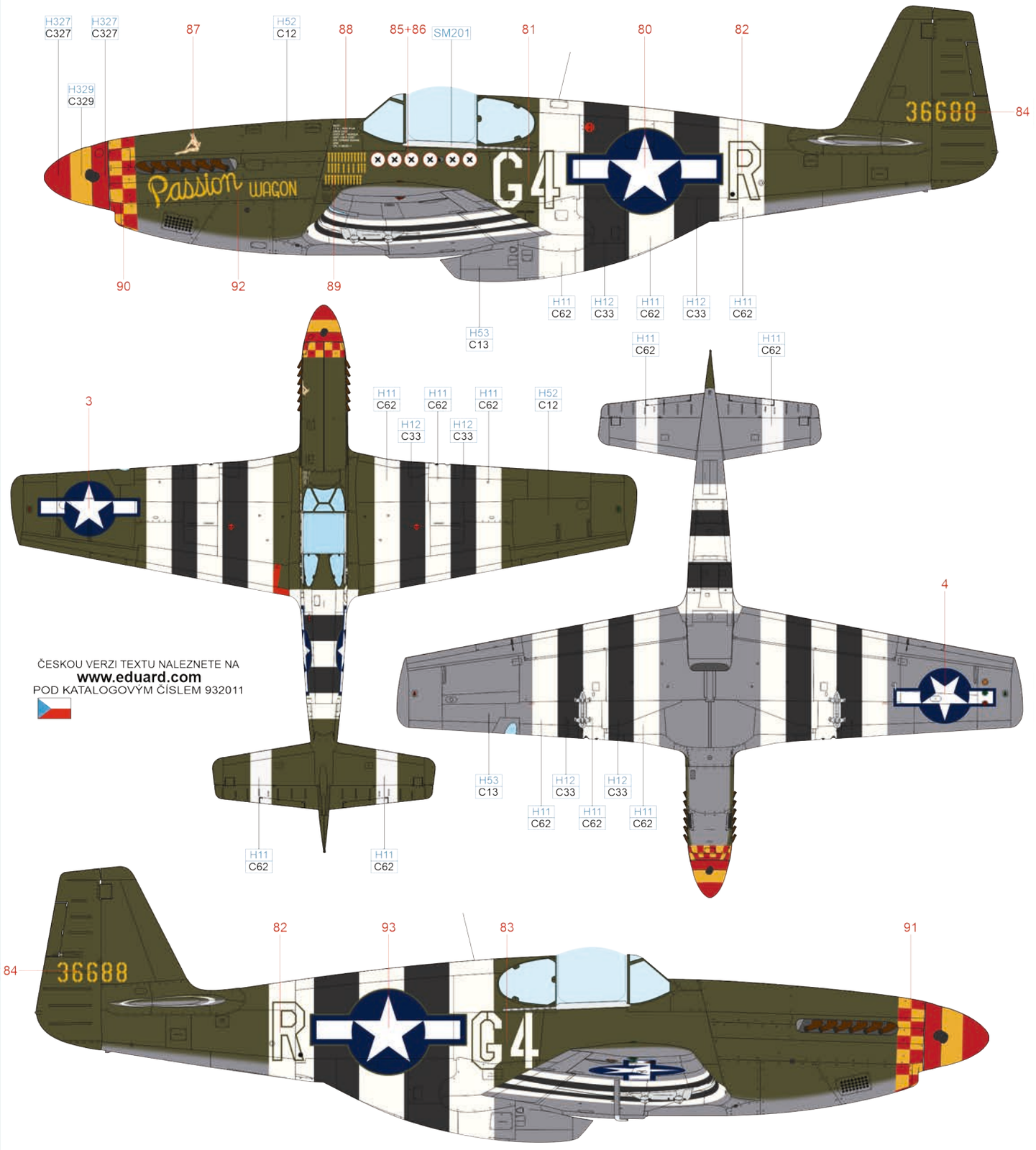

FLAT WHITE	H11 C62	FLAT BLACK	H12 C33	SUPER FINE SILVER 2	SM201		
OLIVE DRAB	H52 C12	NEUTRAL GRAY	H53 C13	RED	H327 C327	YELLOW	H329 C329

H P-51B-10-NA, s/n 42-106647, Capt. John R. Brown Jr., 382nd FS, 363rd FG, 9th AF, Staplehurst, United Kingdom, June 1944

Prior to the combat, John Brown had managed to destroy four aircraft and damage one in various accidents, so he claimed himself to be only three-fifths of an aircraft away from becoming a Luftwaffe ace. He flew successively in the 356th FG and 362nd FG, both with P-47s, then briefly became commander of the 382nd FS/363rd FG, flying the P-51B. He was shot down with his Big Mac on August 8, 1944, while leading a formation of eight P-51s in an attack on ships in Bedonet Harbor. It was his 99th mission. He made an emergency landing near Quimper after being hit by flak from a destroyer but managed to escape capture and slip back to the Allies within a week. He subsequently became commander of the 437th FS/414th FG, with which he moved to Guam, where he flew P-47Ns. After the war, he became an air attaché in Afghanistan and Pakistan and completed a secret mission in the USSR. During his wartime career, he scored one aerial kill, destroyed four enemy aircraft on the ground, and damaged eight.

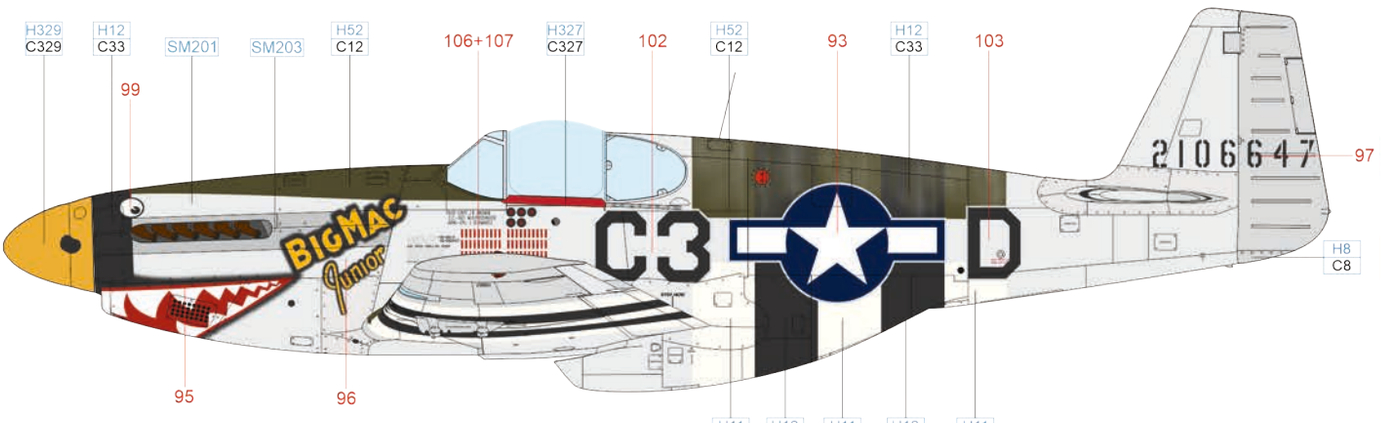

VISIBLE REMNANTS OF THE INVASION STRIPES ON THE UPPER SIDES. USE HEAVILY DILUTED COLOR TO DEPICT THEM.

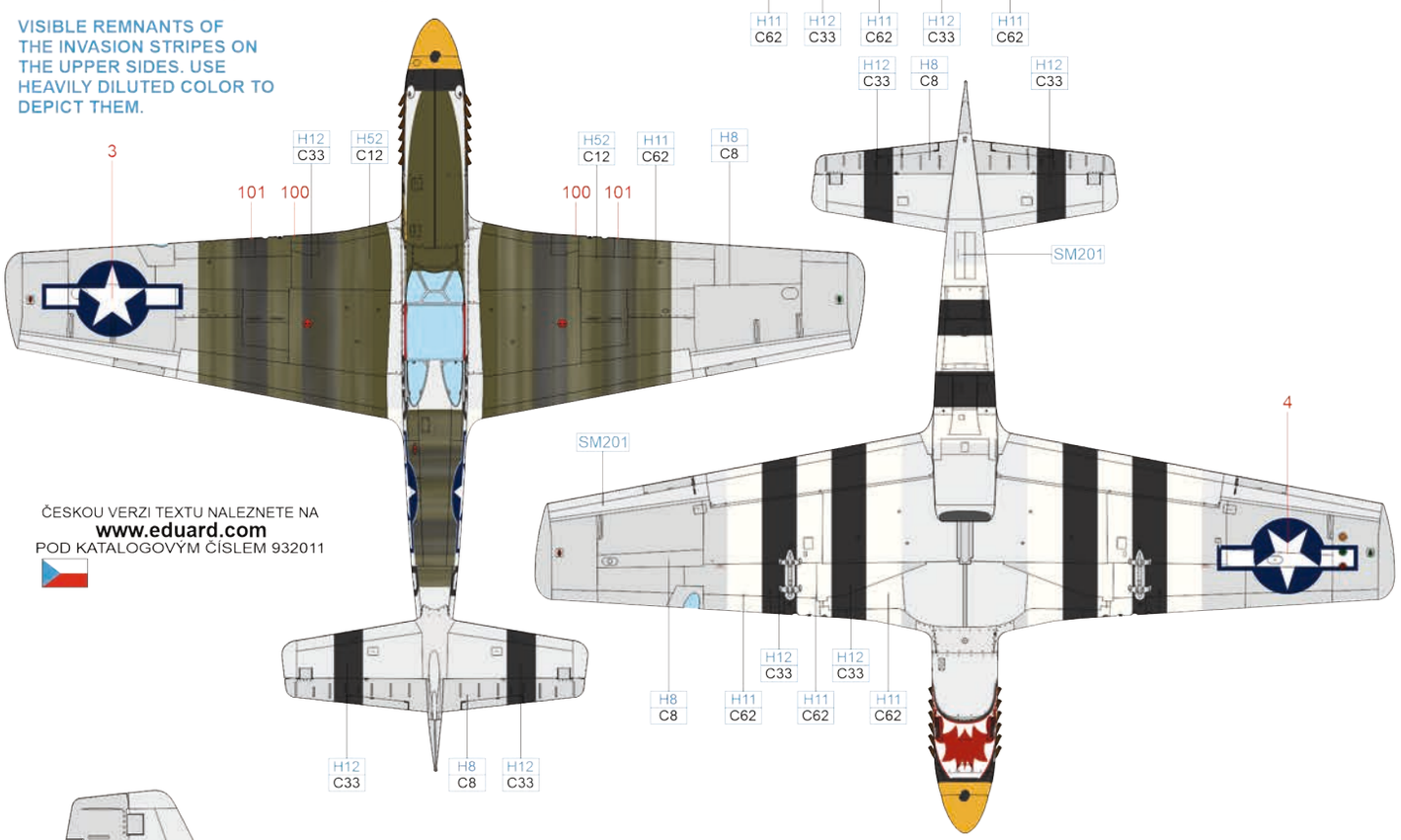

ČESKOU VERZI TEXTU NALEZNETE NA
www.eduard.com
POD KATALOGOVÝM ČÍSLEM 932011

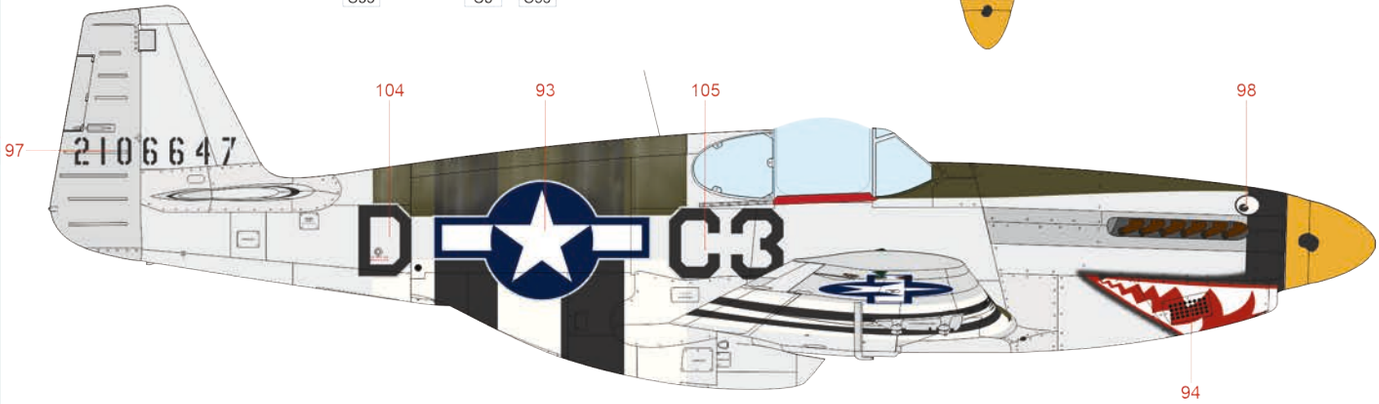

RED	H327 C327	YELLOW	H329 C329	SUPER IRON 2	SM203				
OLIVE DRAB	H52 C12	SILVER	H8 C8	FLAT BLACK	H12 C33	FLAT WHITE	H11 C62	SUPER FINE SILVER 2	SM201

P-51B STENCILING POSITIONS

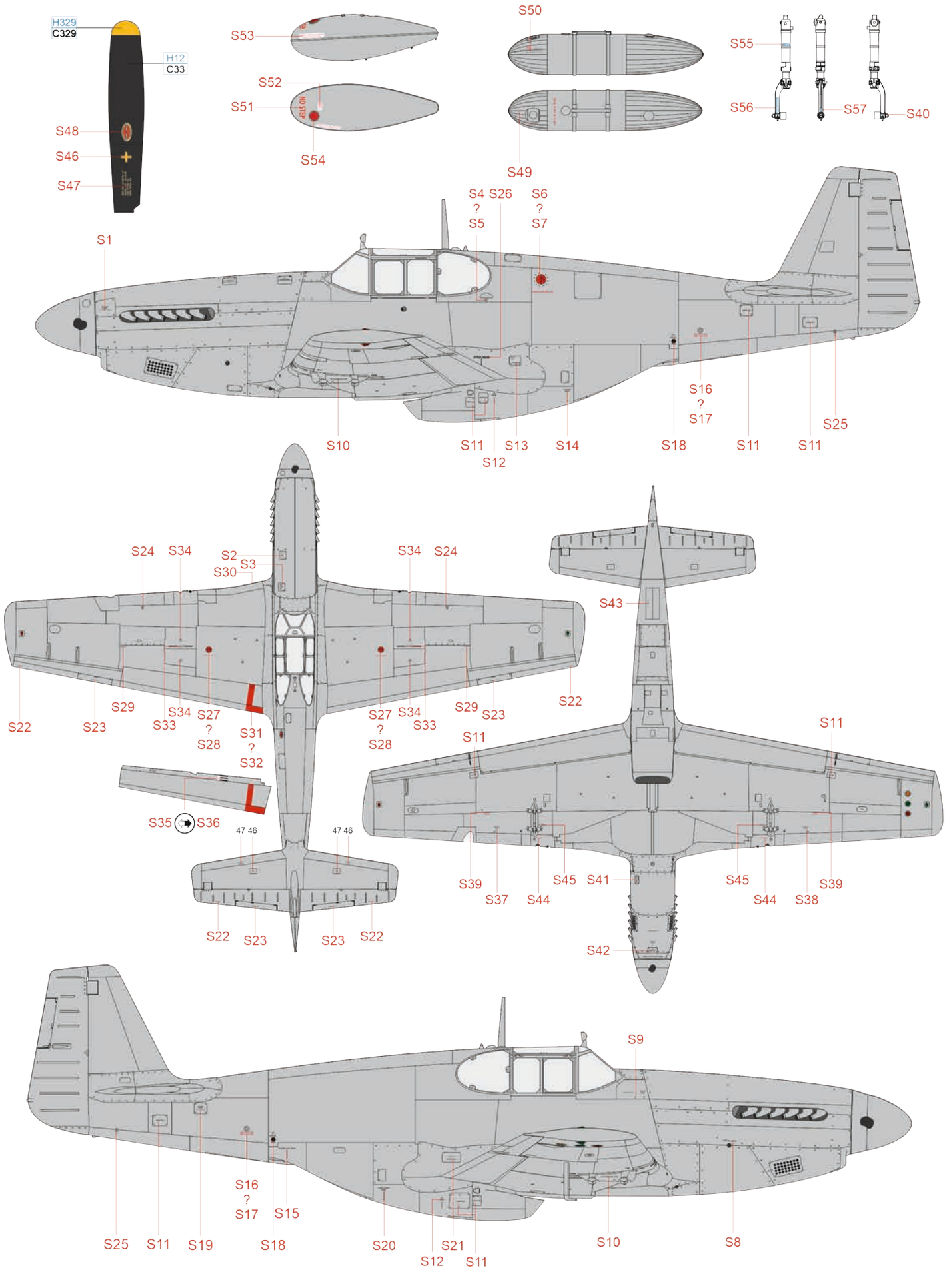

© EDUARD M.A. 2026

Printed in Czech Republic